ADF&G TECHNICAL DATA REPORT NO. 122
(Limited Distribution)

STATE OF ALASKA
Bill Sheffield, Governor

UPPER COOK INLET SALMON (*Oncorhynchus* spp.) ESCAPEMENT STUDIES, 1983

By:
Bruce E. King

and

Kenneth E. Tarbox

July 1984

ALASKA DEPARTMENT OF FISH AND GAME
P.O. Box 3-2000, Juneau, Alaska 99802

Don W. Collinsworth
Commissioner

ADF&G TECHNICAL DATA REPORTS

This series of reports is designed to facilitate prompt reporting of data from studies conducted by the Alaska Department of Fish and Game, especially studies which may be of direct and immediate interest to scientists of other agencies.

The primary purpose of these reports is presentation of data. Description of programs and data collection methods is included only to the extent required for interpretation of the data. Analysis is generally limited to that necessary for clarification of data collection methods and interpretation of the basic data. No attempt is made in these reports to present analysis of the data relative to its ultimate or intended use.

Data presented in these reports is intended to be final, however, some revisions may occasionally be necessary. Minor revisions will be made via errata sheets. Major revisions will be made in the form of revised reports.

UPPER COOK INLET SALMON *(Oncorhynchus* spp.*)* ESCAPEMENT STUDIES, 1983

By

Bruce E. King
Fisheries Biologist

and

Kenneth E. Tarbox
Fisheries Biologist

Alaska Department of Fish and Game
Division of Commercial Fisheries
Soldotna, Alaska 99669

May 1984

TABLE OF CONTENTS

	Page
LIST OF FIGURES	i
LIST OF TABLES	ii
LIST OF APPENDIX TABLES	iv
ABSTRACT	ix
INTRODUCTION	1
METHODS	1
RESULTS AND DISCUSSION	8
Kenai River	8
Kasilof River	21
Crescent River	33
Susitna River	33
Sockeye Salmon	38
Pink Salmon	42
Chum Salmon	49
Coho Salmon	52
Chinook Salmon	52
Evaluation of Data	54
Upper Cook Inlet Minor Systems	54
LITERATURE CITED	60
APPENDICES	63

LIST OF FIGURES

Figure		Page
1.	Kenai River drainage and major sockeye salmon rearing lakes	2
2.	Kasilof River drainage and major sockeye salmon spawning and rearing areas	3
3.	Crescent River drainage and major sockeye salmon rearing lake . . .	4
4.	Susitna River drainage and major tributary rivers. All escapement enumeration sites except Susitna Station were operated by the Susitna Hydroelectric Project	5
5.	Kenai River side scan sonar count sector distribution over time (grouped in three-day time periods), 22 June - 12 August 1983 . . .	15
6.	Kenai River side scan sonar count hourly distribution over time (two-hour increments grouped in three-day time periods), 22 June - 12 August 1983	16
7.	Percent of total tags recovered by spawning area (grouped by date of tagging at the Kasilof River sonar site) expressed in number of fish enumerated by sonar during each tagging period. Note: A small proportion of tags were recovered in spawning areas outside of Tustumena Lake	26
8.	Kasilof River side scan sonar count hourly distribution over time (two-hour increments grouped in five-day time periods), 11 June - 31 July 1983	29
9.	Kasilof River side scan sonar count sector distribution over time (grouped in three-day time periods), 11 June - 31 July 1983	30
10.	Crescent River side scan sonar count sector distribution over time (grouped in three-day time periods), 1 July - 31 July 1983	34
11.	Crescent River side scan sonar count hourly distribution over time (two-hour increments grouped in five-day time periods), 1 July - 31 July 1983	35
12.	Susitna Station side scan sonar count sector distribution over time (grouped in four-day time periods), 1 July - 8 August 1983	43
13.	Susitna Station side scan sonar count hourly distribution over time (two-hour increments grouped in four-day time periods), 1 July - 8 August 1983	44
14.	Upper Cook Inlet west side streams	55

LIST OF TABLES

Table		Page
1.	Estimated sockeye salmon escapement recorded by side scan sonar in the Kenai, Kasilof, Crescent, and Susitna Rivers, 1978-1983	9
2.	Late run Kenai River sockeye salmon escapement summary, 1968-1983	10
3.	Peak late run sockeye salmon escapement counts in eight index areas, Kenai River drainage, 1969-1982	11
4.	Salmon escapement counts conducted on selected tributaries of the Kenai River, 1983	12
5.	Bank distribution and timing of salmon escapement recorded by side scan sonar in the Kenai, Kasilof, Crescent, and Susitna Rivers, 1979-1983	13
6.	Date of cumulative percent of late run sockeye salmon counts recorded in the Kenai River, 1968-1983	18
7.	Comparison of three methods of determining age composition of sockeye salmon collected in the Kenai River, 1983	19
8.	Age composition of sockeye salmon collected in the Kenai River, 1969-1983	20
9.	Kasilof River sockeye salmon escapement summary, 1968-1983	22
10.	Peak sockeye salmon escapement counts in seven index areas, Kasilof River drainage, 1975-1983	23
11.	Distribution (percent) of sockeye salmon in the major index tributary systems of Tustumena Lake, 1975-1982	24
12.	Date of cumulative percent of sockeye salmon counts recorded in the Kasilof River, 1968-1983	25
13.	Mean residence time in Tustumena Lake of sockeye salmon bound for Glacier Flats and Bear Creeks, 1983	27
14.	Age composition of sockeye salmon collected in the Kasilof River, 1969-1983	31
15.	Comparison of three methods of determining age composition of sockeye salmon collected in the Kasilof River, 1983	32
16.	Date of cumulative percent of sockeye salmon counts recorded in the Crescent River, 1979-1983	36
17.	Age composition of sockeye salmon collected in the Crescent River, 1979-1983	37

LIST OF TABLES (Continued)

Table		Page
18.	Peak sockeye salmon escapement counts in Susitna River tributary index areas, 1973-1983	39
19.	Salmon escapement counts in Susitna River tributaries, 1983	40
20.	Date of cumulative percent of sockeye salmon counts recorded at Susitna Station in the Susitna River, 1978-1982	45
21.	Comparison of three methods of determining age composition of sockeye salmon collected in the Susitna River at Susitna Station, 1983	46
22.	Age composition of sockeye salmon collected in the Susitna River at Susitna Station, 1975-1983	47
23.	Side scan sonar fish targets apportioned to pink salmon, chum salmon, and coho salmon in the Susitna River at Susitna Station, 1978-1983	48
24.	Date of cumulative percent of pink salmon counts recorded in the Susitna River at Susitna Station, 1978-1983	50
25.	Unweighted age composition of chum salmon collected in the Susitna River at Susitna Station, 1975-1983	51
26.	Unweighted age composition of coho salmon collected in the Susitna River, 1975-1983	53
27.	Salmon escapement observations in selected Upper Cook Inlet anadromous streams, 1983	55
28.	Fish Creek sockeye salmon escapement, Big Lake drainage, 1936-1983	58
29.	Date of cumulative percent of sockeye salmon counts recorded in Fish Creek, 1978-1983	59

LIST OF APPENDIX TABLES

Appendix Table		Page
1.	Total number of fish targets and estimated species composition recorded by side scan sonar in the Kenai River, 22 June through 12 August 1983	64
2.	Kenai River north bank side scan sonar counts by sector, 22 June through 12 August 1983	66
3.	Kenai River north bank side scan sonar counts by sector, three-day time periods, 22 June through 12 August 1983	68
4.	Kenai River south bank side scan sonar counts by sector, 22 June through 12 August 1983	69
5.	Kenai River south bank side scan sonar counts by sector, three-day time periods, 22 June through 12 August 1983	71
6.	Kenai River north bank side scan sonar counts by hour, 22 June through 12 August 1983	72
7.	Kenai River north bank side scan sonar counts by hour, three-day time periods, 22 June through 12 August 1983	73
8.	Kenai River south bank side scan sonar counts by hour, 22 June through 12 August 1983	74
9.	Kenai River south bank side scan sonar counts by hour, three-day time periods, 22 June through 12 August 1983	75
10.	Total number of fish targets and estimated species composition recorded by north bank sonar in the Kenai River, 22 June through 12 August 1983	76
11.	Total number of fish targets and estimated species composition recorded by south bank sonar in the Kenai River, 22 June through 12 August 1983	78
12.	Daily fishwheel catch by species from the Kenai River, 6 July through 15 August 1983	80
13.	Length composition of the major age classes of sockeye salmon collected in the Kenai River, 1976-1983	81
14.	Weight composition of the major age classes of sockeye salmon collected in the Kenai River, 1981-1983	83
15.	Total number of fish targets and estimated species composition recorded by side scan sonar in the Kasilof River, 11 June through 31 June 1983	84

LIST OF APPENDIX TABLES (Continued)

Appendix Table		Page
16.	Total number of fish targets and estimated species composition recorded by north bank sonar in the Kasilof River, 11 June through 31 July 1983	86
17.	Total number of fish targets and estimated species composition recorded by south bank sonar in the Kasilof River, 11 June through 31 July 1983	88
18.	Summary of Kasilof sonar-site tagged sockeye salmon recoveries, 1983	90
19.	Kasilof River north bank side scan sonar counts by hour, 11 June through 31 July 1983	95
20.	Kasilof River south bank side scan sonar counts by hour, three-day time periods, 11 June through 31 July 1983	96
21.	Kasilof River south bank side scan sonar counts by hour, 11 June through 31 July 1983	97
22.	Kasilof River north bank side scan sonar counts by hour, three-day time periods, 11 June through 31 July 1983	98
23.	Kasilof River north bank side scan sonar counts by sector, 11 June through 31 July 1983	99
24.	Kasilof River north bank side scan sonar counts by sector, three-day time periods, 11 June through 31 July 1983	101
25.	Kasilof River south bank side scan sonar counts by sector, 11 June through 31 July 1983	102
26.	Kasilof River south bank side scan sonar counts by sector, three-day time periods, 11 June through 31 July 1983	104
27.	Daily fishwheel catch by species on the north bank of the Kasilof River, 3 July through 28 July 1983	105
28.	Daily fishwheel catch by species on the south bank of the Kasilof River, 17 June through 24 July 1983	106
29.	Length composition of the major age classes of sockeye salmon in the Kasilof River, 1976-1983	107
30.	Weight composition of the major age classes of sockeye salmon collected in the Kasilof River, 1981-1983	109
31.	Total number of fish targets and estimated species composition recorded by side scan sonar in the Crescent River, 1 July through 31 July 1983	110

LIST OF APPENDIX TABLES (Continued)

Appendix Table		Page
32.	Crescent River north bank side scan sonar counts by sector, 1 July through 31 July 1983	111
33.	Crescent River north bank side scan sonar counts by sector, three-day time periods, 1 July through 31 July 1983	112
34.	Crescent River south bank side scan sonar counts by sector, 1 July through 31 July 1983	113
35.	Crescent River south bank side scan sonar counts by sector, three-day time periods, 1 July through 31 July 1983	114
36.	Crescent River north bank side scan sonar counts by hour, 1 July through 31 July 1983	115
37.	Crescent River north bank side scan sonar counts by hour, three-day time periods, 1 July through 31 July 1983	116
38.	Crescent River south bank side scan sonar counts by hour, 1 July through 31 July 1983	117
39.	Crescent River south bank side scan sonar counts by hour, three-day time periods, 1 July through 31 July 1983	118
40.	Total number of fish targets and estimated species composition recorded by north bank, sonar in the Crescent River, 1 July through 31 July 1983	119
41.	Total number of fish targets and estimated species composition recorded by south bank sonar in the Crescent River, 1 July through 31 July 1983	120
42.	Daily fishwheel and seine catch by species from the Crescent River, 9 July through 27 July 1983	121
43.	Length composition of the major age classes of sockeye salmon collected in the Crescent River, 1979-1983	122
44.	Weight composition of the major age classes of sockeye salmon in the Crescent River, 1980-1983	124
45.	Total number of fish targets and estimated species composition recorded by side scan sonar in the Susitna River at Susitna Station, 1 July through 8 August 1983	125
46.	Apportioned sonar counts and Petersen population (tag-recapture) estimates by species and sampling location, Adult Anadromous Investigations, Susitna Hydroelectric Studies, 1983	127

LIST OF APPENDIX TABLES (Continued)

Appendix Table		Page
47.	Susitna River (Susitna Station) west bank side scan sonar counts by sector, 1 July through 8 August 1983	128
48.	Susitna River (Susitna Station) west bank side scan sonar counts by sector, four-day time periods, 1 July through 8 August 1983	130
49.	Susitna River (Susitna Station) east bank side scan sonar counts by sector, 1 July through 8 August 1983	131
50.	Susitna River (Susitna Station) east bank side scan sonar count by sector, four-day time periods, 1 July through 8 August 1983	133
51.	Susitna River (Susitna Station) west bank side-scan sonar counts by hour, 1 July through 8 August 1983	134
52.	Susitna River (Susitna Station) west bank side scan sonar counts by hour, four-day time periods, 1 July through 8 August 1983	135
53.	Susitna River (Susitna Station) east bank side scan sonar counts by hour, 1 July through 8 August 1983	136
54.	Susitna River (Susitna Station) east bank side scan sonar counts by hour, four-day time periods, 1 July through 8 August 1983	137
55.	Total number of fish targets and estimated species composition recorded by west bank sonar in the Susitna River at Susitna Station, 1 July through 8 August 1983	138
56.	Total number of fish targets and estimated species composition recorded by east bank sonar in the Susitna River at Susitna Station, 1 July through 8 August 1983	140
57.	Daily fishwheel catch by species on the east bank of the Susitna River at Susitna Station, 1 July through 5 September 1983	142
58.	Daily fishwheel catch by species on the west bank of the Susitna River at Susitna Station, 1 July through 8 August 1983	143
59.	Length composition of the major age classes of sockeye salmon collected in the Susitna River at Susitna Station, 1979-1983	144

LIST OF APPENDIX TABLES (Continued)

Appendix Table		Page
60.	Weight composition of the major age classes of sockeye salmon collected in the Susitna River at Susitna Station, 1979-1983	145
61.	Length composition from pink salmon collected in the Susitna River at Susitna Station, 1976-1983	146
62.	Weight composition from pink salmon collected in the Susitna River at Susitna Station, 1976-1983	147
63.	Length composition from the major age classes of chum salmon collected in the Susitna River at Susitna Station, 1976-1983	148
64.	Weight composition from the major age classes of chum salmon collected in the Susitna River at Susitna Station, 1980-1983	150
65.	Length composition from the major age classes of coho salmon collected in the Susitna River, 1975-1983	151
66.	Weight composition from the major age classes of coho salmon collected in the Susitna River, 1979-1983	152

ABSTRACT

Sockeye salmon *(Oncorhynchus nerka)* 1983 escapements into the four major river systems of Upper Cook Inlet, Alaska were estimated by hydroacoustic and other techniques in 1984. Escapements totaled 630,340 into the Kenai River, 210,271 into the Kasilof River, 92,343 into the Crescent River, and 112,314-176,200 into the Susitna River. Escapements of chum salmon *(O. keta)*, coho salmon *(O. kisutch)*, and pink salmon *(O. gorbuscha)* into the Susitna River were also monitored. Estimates derived by a combination of sonar and mark-recapture techniques were 101,300 pink salmon, 276,800 chum salmon, and 24,100 coho salmon. Age, sex, length, and weight data for the above salmon species are also presented. In addition, escapement information for Upper Cook Inlet streams compiled by other Alaska Department of Fish and Game divisions, state and federal agencies, private consultants, and nonprofit corporations are included.

KEY WORDS: Pacific salmon escapements, hydroacoustic enumeration, biological sampling.

INTRODUCTION

In 1983, sockeye salmon *(Oncorhynchus nerka)* escapements were enumerated or monitored daily by the Alaska Department of Fish and Game (ADF&G) in the Kenai, Kasilof, Crescent, and Susitna River drainages of Upper Cook Inlet (Figures 1 through 4). Pink salmon *(O. gorbuscha)*, chum salmon *(O. keta)*, and coho salmon *(O. kisutch)* escapements into the Susitna River were also monitored during the sockeye salmon run.

A description of the Upper Cook Inlet management area and its major sockeye salmon producing rivers is presented in Tarbox et al. (1981). Historical information on escapement enumeration efforts can be found in Waltemyer et al. (1980).

The objectives of Upper Cook Inlet escapement research projects conducted by the Commercial Fisheries Division on the Kenai, Kasilof, Susitna, and Crescent Rivers in 1983 were to estimate:

1) The relative magnitude of escapement and migration timing of sockeye salmon in the mainstem river;

2) The age, weight, length (AWL), and sex characteristics of the sockeye salmon escapement; and

3) The magnitude, timing, and distribution of adult sockeye salmon within established index areas (excluding Crescent River).

Additional objectives for the Susitna River project were to assess:

1) The relative magnitude of escapement of coho salmon, chum salmon, and pink salmon in the mainstem river; and

2) The age, weight, length, and sex characteristics of coho salmon, chum salmon, and pink salmon escapements.

A secondary objective of the 1983 Data Report was to document additional salmon research conducted by other investigators in 1983 on major tributaries of the Kenai, Kasilof, Susitna, and Crescent River drainages as well as other systems in the Upper Cook Inlet area. Population estimates or peak counts made by other ADF&G divisions, state and federal agencies, private consultants, and nonprofit corporations were summarized and presented when available.

METHODS

Since the early 1960's, the ADF&G has contracted the Bendix Corporation to develop sonar equipment to count the number of sockeye salmon migrating to the spawning grounds in the major rivers of the Cook Inlet area. Glacial silt in these rivers severely limits less expensive visual means of escapement assessment. This development has resulted in the installation of Bendix side-scanning sonar counters in the Kenai, Kasilof, Susitna, and Crescent Rivers. Two units (one per bank) have

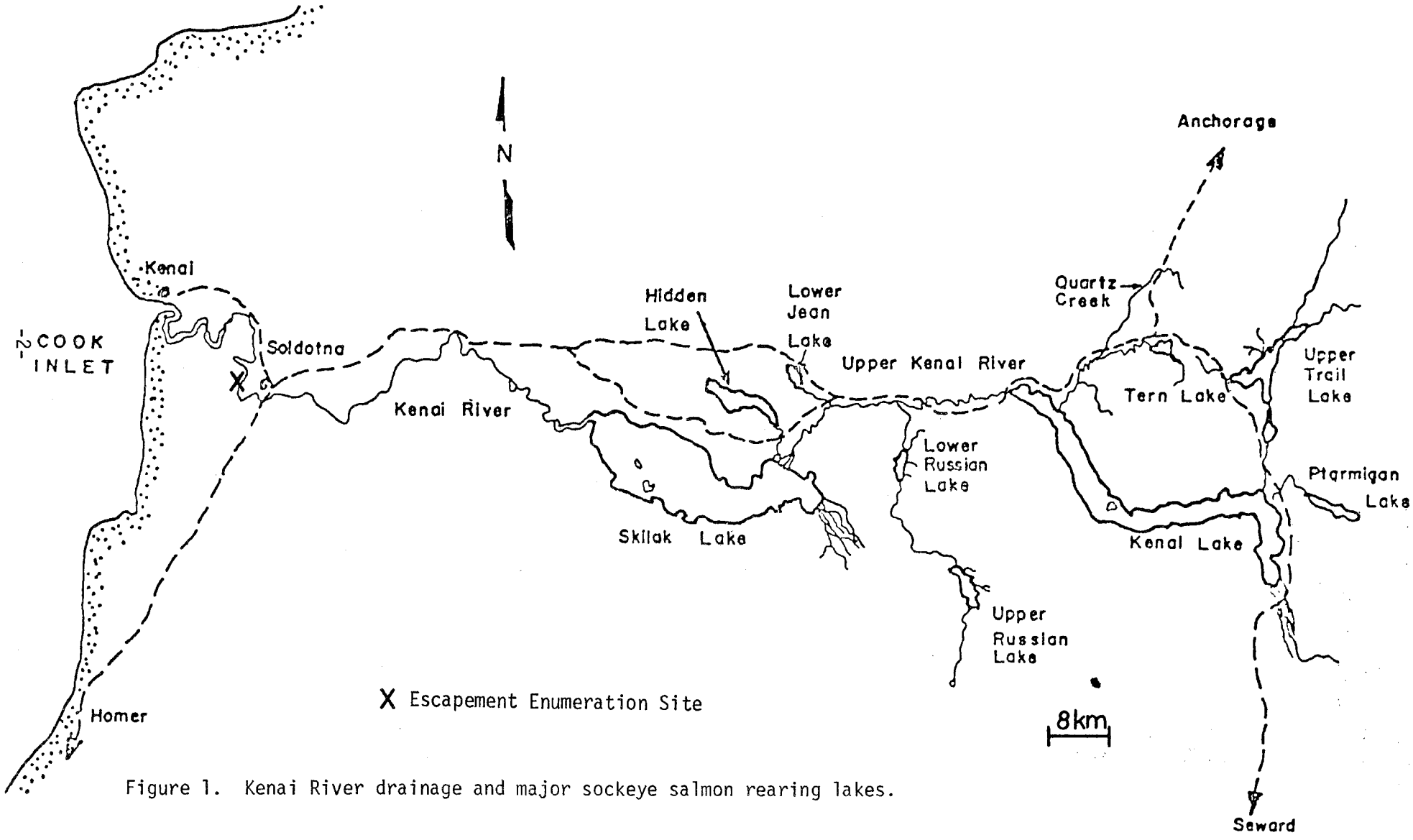

Figure 1. Kenai River drainage and major sockeye salmon rearing lakes.

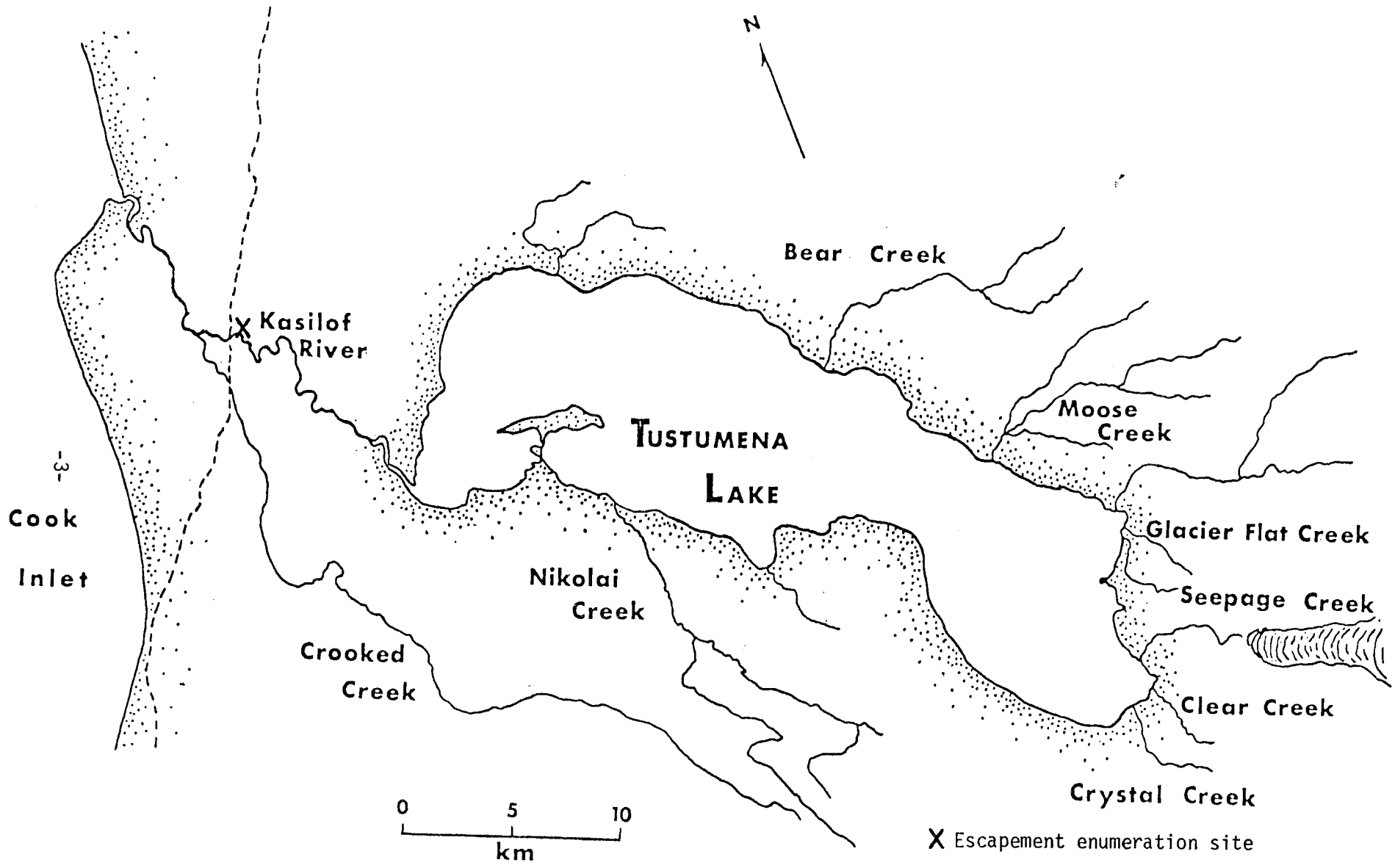

Figure 2. Kasilof River drainage and major sockeye salmon spawning and rearing areas.

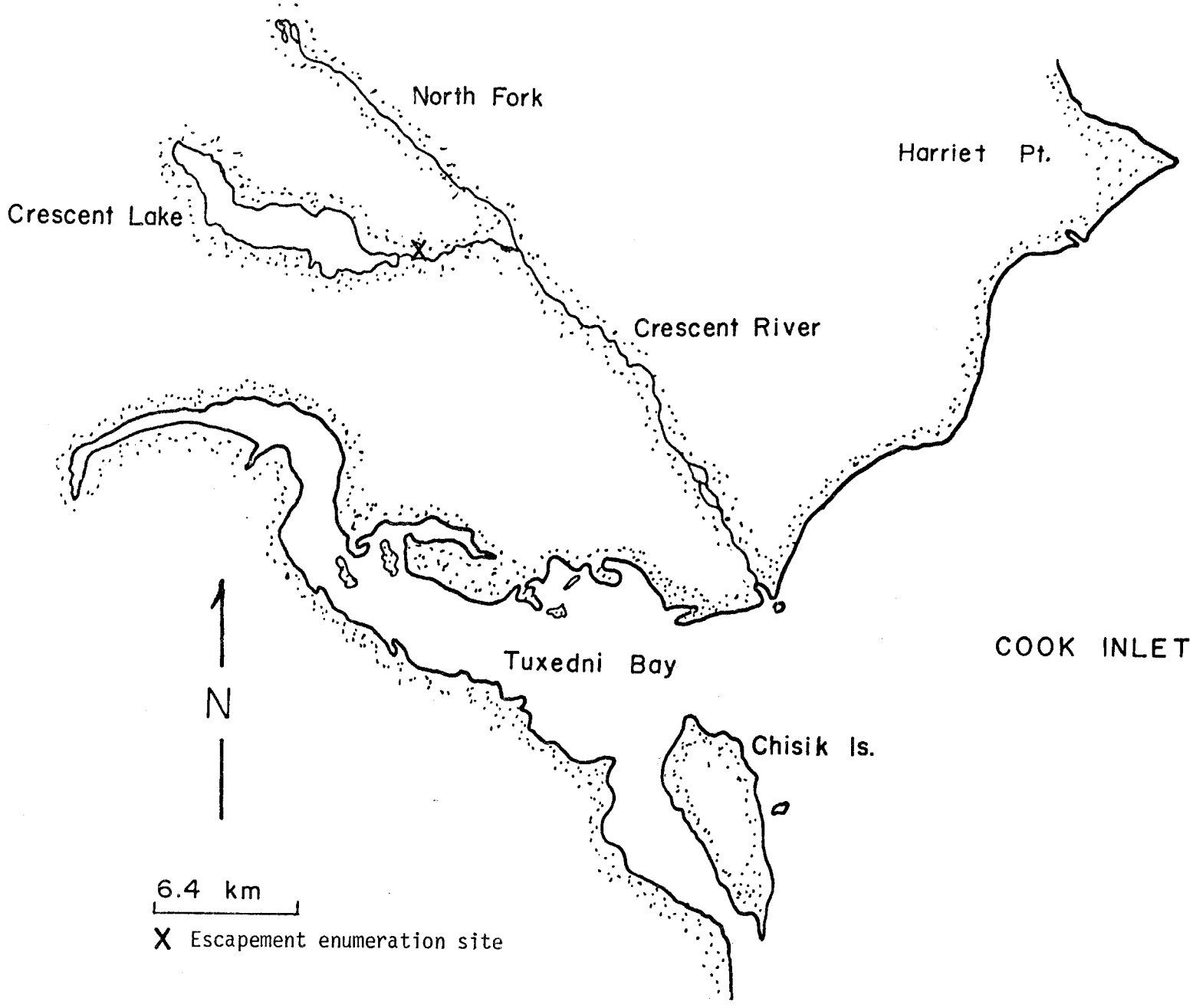

Figure 3. Crescent River drainage and major sockeye salmon rearing lake.

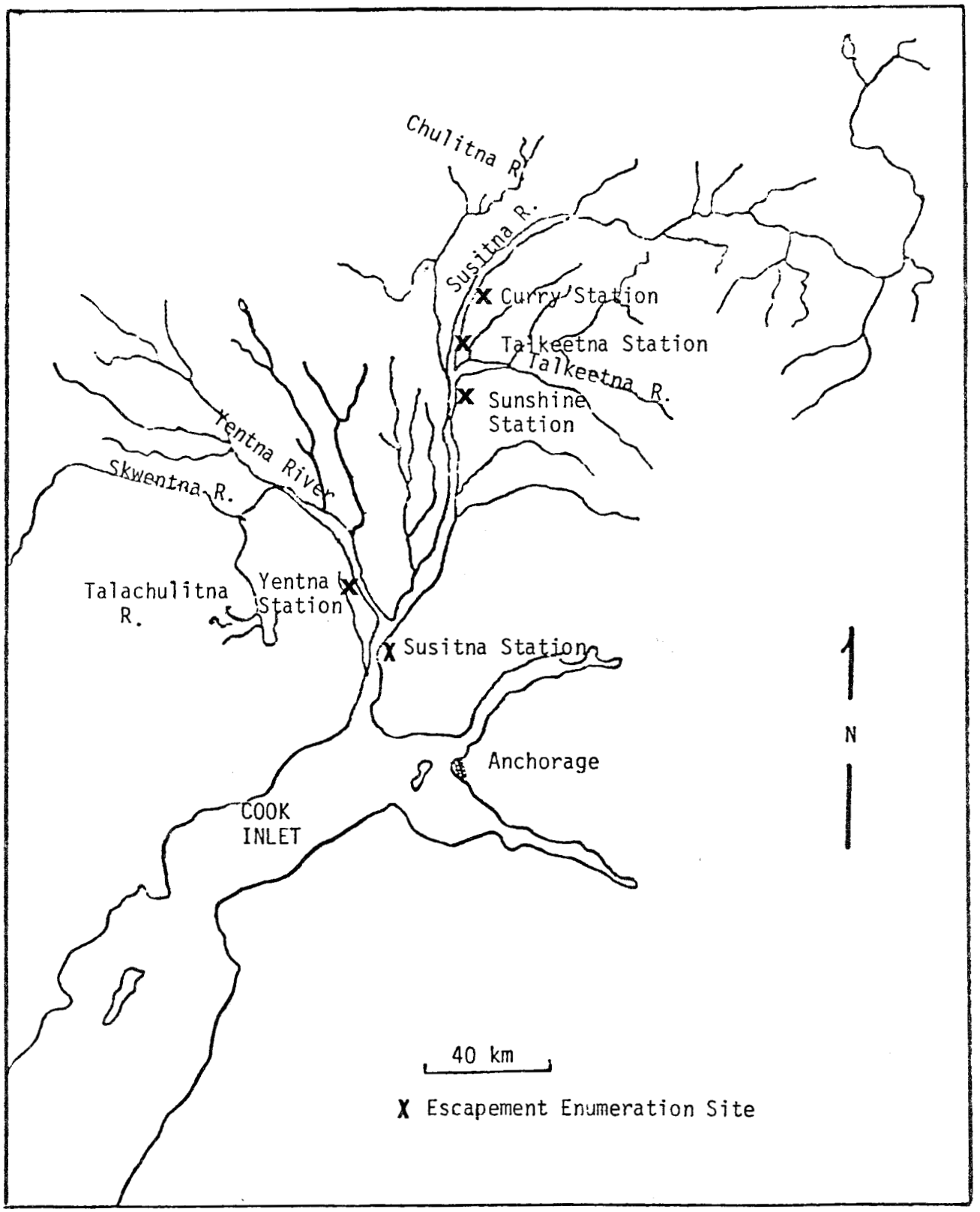

Figure 4. Susitna River drainage and major tributary rivers. All escapement enumeration sites except Susitna Station were operated by the Susitna Hydroelectric Project.

been operated in each system since 1980. Counter model years used in 1983 were as follows: 1980 model (Kenai River); 1978 model (Susitna and Kasilof Rivers); and, 1977 and 1979 models (Crescent River). Due to sonar siting and operating problems at the Kasilof River slackwater site (King and Tarbox 1983), sonar operations were moved downstream approximately 15 km in 1983. Analysis of migratory behavior and timing data, when compared to historical data, reflects this change in distance from Cook Inlet to the enumeration site.

Procedures for deployment of the side-scan sonar substrates, equipment operation, calibration, and hydroacoustic fish counting equipment used prior to 1980 are summarized in Tarbox et al. (1983). In an effort to determine the degree of migration outside the normal side scan sonar counting range (20 m) on the north bank of the Kenai River and east bank of the Susitna River in 1983, the counting range was periodically extended to 30 m and a ratio of counts inside 20 m to counts inside 30 m was generated. This ratio was then applied to the daily sonar count to more accurately estimate the daily escapement. Procedures employed by the Susitna Hydroelectric Project are presented in ADF&G (1984).

Field enumeration activities in 1983 began and ended on the following dates:

Kenai River - 22 June to 12 August
Kasilof River - 10 June to 31 July
Susitna River - 1 July to 8 August
Crescent River - 1 July to 31 July

Fishwheels were installed at all sites to assess migration timing, provide relative salmon species abundance data for apportionment of sonar counts, and obtain age, weight, length, and sex composition samples. Additional Crescent River fish samples were obtained by beach seine. To derive species apportionment of sonar counts, daily fishwheel catches were grouped into samples of at least 150 salmon. The daily sonar count was then multiplied by the relative abundance of each species captured by the fishwheels to estimate the apportioned sonar count by species.

The AWL data obtained from each salmon species were as follows below:

1) Chum and coho salmon. Age (scale), weight, length (mid-eye to fork of tail), and sex composition data were collected from all adults captured.

2) Pink salmon. A minimum of 10 age (scale), weight, length, and sex composition samples were collected daily.

3) Sockeye salmon. Length and weight data from sockeye salmon were limited to approximately 600 samples per river. Generally, all fish were sampled until this level was achieved, under the assumption that lengths and weights by age class and sex do not change significantly through time. All fish collected were examined for sex related characteristics and sex ratios were determined by grouping all samples together regardless of timing of sampling. Scales were also taken from the first 300 adults captured to provide "known" growth pattern samples for the stock separation catch allocation program (Cross, pers. comm.).

The sockeye salmon age composition (scale) sampling program was then altered in an attempt to determine the degree of seasonal variation in age composition occurring in the Kenai, Kasilof, and Susitna Rivers. This was accomplished by breaking the escapement by river into several periods and weighting the age composition within each period by the apportioned sonar count obtained during that period. These data were then recombined to derive a weighted total season age composition which was statistically compared to the age composition derived by lumping all samples together. It was assumed that significant differences between the proportions of each major age class provided by the two methods resulted from a seasonal change in age composition of fish entering the river.

Sample size within each period was based on Bernard (1983). Essentially, it was decided to obtain as many samples as possible every 3 to 4 days within the following limits below:

1) Kenai River. The first day after sonar counts reached 10,000 per day, up to 500 fish were sampled in a 24-hour period. This sampling schedule continued until sonar counts dropped below 10,000 per day.

2) Kasilof River. All fish captured (up to 640) in a 24-hour period were sampled.

3) Susitna River. The first day after apportioned sockeye salmon sonar counts reached 10,000 per day, up to 640 fish were sampled in a 24-hour period. This sampling schedule was continued until counts dropped below 10,000 per day.

Periods for weighting were established post-season and age composition was derived in one of three ways: (1) Method I - combine all samples together into one period (unweighted age composition); (2) Method II - determine three to four periods of roughly equal escapement, derive an age composition based on all samples taken within that period, and recombine the data to get a total weighted age composition; and (3) Method III - use samples from one or more dates (but not all) within each period to derive the age composition for that period and recombine the data to get a total weighted age composition. Cases where more than one date per period was used were necessary if the desired sample size was not achieved in 24 hours.

Sockeye salmon sampled at the Kasilof River sonar site were marked prior to release with Floy spaghetti tags to investigate the possibility of differential river entry timing by individual Tustumena Lake tributary spawning populations. Beginning 6 August, sockeye salmon captured in the Kenai River fishwheel were also marked prior to release with Floy spaghetti tags to determine the relative proportion of fish tagged in the lower river entering the Russian River.

Index-area escapement surveys were conducted by staff personnel on the Kenai, Kasilof, and Susitna Rivers, and various minor Northern District river systems. A combination of helicopter, fixed wing aircraft, and foot surveys were conducted from 1 August to 15 September. These surveys have been conducted annually to

obtain an indication of spawner distribution and relative escapement magnitude within tributaries. In the initial years of side-scan sonar deployment and to some degree in later years, index-area surveys have also served as an alternate index of escapement magnitude into the Kenai and Kasilof Rivers.

Migratory behavior data (side-scan sector and hourly distribution of counts) were analyzed over time using analysis and plotting programs described in Roberson et al. (1982). Migratory timing data were based on apportioned sonar counts.

RESULTS AND DISCUSSION

The following escapement data are presented by drainage. Factors affecting accuracy of counts, and sources of mortality above the sonar site (notably the sport fishing harvest) are presented where known.

Kenai River

A total of 633,171 fish targets was enumerated in the Kenai River from 22 June through 12 August 1983 (Appendix Tables 1-9), of which 630,340 were apportioned (Appendix Table 1) to sockeye salmon (Table 1). This total is approximately 45% higher than the average sockeye salmon escapement for the 5 years since escapement goals were raised to their present level, and exceeds the maximum escapement level of 500,000 fish by 26%. When sport fish harvest estimates are subtracted from the sonar count, the estimated number of potential spawners was 576,040 (Table 2).

Escapement estimates were also obtained for tributaries of the Kenai River from spawning ground surveys and weir counts (Table 3). Data from index-area surveys indicated counts for 1983 are comparable in magnitude to previous years. Peak counts for other salmon species (and early-run sockeye salmon) obtained during index-area surveys are reported in Table 4.

Known tributary spawning accounted for 28% of the estimated late run sockeye salmon entering the drainage. Approximately 86% of the observed tributary spawners were counted in Quartz Creek and Russian River. The Russian River late run (78,000 fish) exceeded the historic mean by approximately 55% (Nelson 1984) although the minimum escapement goal of 30,000 above the weir at Lower Russian Lake was exceeded by only 4,000 fish. The remainder spawned between the weir and the confluence of the Russian River with the mainstem Kenai River.

Migratory behavior of sockeye salmon at the sonar site was assessed by analysis of distribution from shore (expressed in percentage of targets by counting sector), hourly distribution, river bank preference, and cumulative percentage of sonar counts by day (migratory timing).

As in 1982, the south bank was the preferred migratory route with 58% of the total counts (Table 5) recorded on this counter. Fish migrating up the south bank also exhibited sector and hour distribution characteristics similar to those observed in prior years. Essentially, as fish passage rate increased, sockeye salmon tended to move closer to shore and concentrate movement between 1700 hour and 0400 hour (Figures 5 and 6).

Table 1. Estimated sockeye salmon escapement recorded by side scan sonar in the Kenai, Kasilof, Crescent, and Susitna Rivers, 1978-1983.

	System			
Year	Kenai R.[1]	Kasilof R.	Crescent R.	Susitna R.[2]
1978	398,900	116,600	[3]	94,400
1979	285,020	152,179[4]	86,654	156,890
1980	464,038	187,154[4]	90,863	190,866
1981	407,639	256,625[4]	41,213	340,232
1982	619,831	180,239[4]	58,957	215,856[5] - 265,332[6]
1983	630,340	210,271[4]	92,343	112,314 - 176,200[7]

[1] Includes counts after 21 June only.

[2] Apportioned sonar counts from Susitna Station unless otherwise indicated.

[3] No counts conducted.

[4] Includes counts or estimates from designated early period (prior to 21 June).

[5] Apportioned sonar counts from Yentna Station (ADF&G 1983) and Susitna Station east bank.

[6] Apportioned sonar count from Yentna Station and mark/recapture estimate from Sunshine Station (ADF&G 1983).

[7] Apportioned sonar count from Yentna Station and mark/recapture estimate from Sunshine Station (ADF&G 1984).

Table 2. Late run Kenai River sockeye salmon escapement summary, 1968-1983.

Year	Sonar count[1]	Russian River sport harvest[2]	Kenai River mainstem sport harvest[3]	Estimated total harvest above sonar site[4]	Sonar count less sport harvest[5]
1968	88,000	5,820			
1969	53,000	1,150			
1970	73,000	600			
1971	--	10,730			
1972	318,000	16,050			
1973	367,000	8,930			
1974	161,000	8,500	8,030	16,530[6]	144,470
1975	142,000	8,390	5,110	13,500[6]	128,500
1976	380,000	13,700	13,140	26,840[6]	353,160
1977	708,000	27,440	16,933	44,373[6]	663,627
1978	398,900	24,530	24,542	49,072[6]	349,828
1979	285,020	26,830	12,328	39,158[6]	245,862
1980	464,038	33,490	18,592	52,082[6]	411,956
1981	407,639	23,720	14,451	38,171	369,468
1982	619,831	10,321	38,397	48,717	571,114
1983	630,340	16,000	38,300	54,300[7]	576,040

[1] Multiple transducer sonar 1968-1977, side scan sonar 1978-1983.

[2] Nelson (1984).

[3] Data from Sport Fish Division Statewide Harvest Estimate. Includes harvest above the Soldotna bridge (and sonar site) only.

[4] Total of Russian River sport harvest and Kenai River mainstem harvest above the Soldotna bridge.

[5] Considered estimate of spawners above the sonar site.

[6] Cross et al. 1983.

[7] Preliminary

Table 3. Peak late run sockeye salmon escapement counts in eight index areas, Kenai River drainage, 1969-1982.

Year	Railroad Creek	Johnson Creek	Carter-Moose Creek	Ptarmigan Creek	Tern (Mud) Lake	Quartz Creek	Hidden Lake	Russian River[1]	Total index area escapement[2]
1969	100	75	598	5	487	421	500	30,020	32,200
1970	99	118	348	7	561	200	323	28,420	30,100
1971	194	160	3,201	45	1,370	808	1,958[4]	64,430	72,200
1972	700	150	3,400	(400)[3]	1,200	(2,000)[3]	4,956[4]	85,000	97,900
1973	521	1,714	660	1,041	1,731	3,173	690[4]	31,660	41,200
1974	3	46	939	558	(700)[3]	255	1,150	26,860	30,600
1975	522	105	1,278	186	1,214	1,068	1,375	32,660	38,400
1976	1,032	(800)[3]	5,558	(500)[3]	1,548	3,372	4,860[4]	35,420	53,100
1977	1,262	450	6,515	1,513	2,230	3,037	1,055[4]	38,500	54,600
1978	1,749	780	1,933	3,529	1,126	10,627	4,647[4]	52,560	76,900
1979	--	588	3,986	523	1,693	277	5,762[4]	91,840	104,700
1980	1,259	253	4,879	5,752	2,575	7,982	27,448[4]	87,200	137,300
1981	1,276	142	4,370	1,421	3,402	5,998[4]	15,939[4]	48,690	81,200
1982	2,518	498	4,752	7,525	4,300	70,540[4]	8,648[4]	75,630	174,400
1983	1,289	338	1,819	9,709	[5]	73,345[4]	11,297[4]	78,000	176,400

[1] Includes total weir counts of fish entering Lower Russian Lake and peak count of escapement below falls.

[2] Total of individual counts rounded to the nearest hundred fish.

[3] Actual data not available. Average contribution to the total index for years 1968, 1970, 1971, 1973, 1975, and 1977 used to estimate the escapement.

[4] F.R.E.D. Division weir count.

[5] No counts conducted.

Table 4. Salmon escapement counts conducted on selected tributaries of the Kenai River, 1983.

Tributary	Method	Peak Count				
		Sockeye	Pink	Coho	Chum	Chinook
Russian River[1]	Weir	21,200		475		
Quartz Creek[2]	Weir		54	1,662	63	351
Daves Creek[2]	Stream Count					14
Crescent Creek[2]	Stream Count	292				95
Ptarmigan Creek[2]	Stream Count				4	31
Grant Creek[2]	Stream Count					51
Juneau Creek[2]	Stream Count	85				92
Benjamin Creek[3]	Stream Count					650 - 800
Jean Creek[2]	Weir	3,038				

[1] Early run only. Counted from 11 June through 23 July (Nelson 1984).

[2] Flagg 1983.

[3] Hammarstrom, pers. comm.

Table 5. Bank distribution and timing of salmon escapement recorded by side scan sonar in the Kenai, Kasilof, Crescent, and Susitna Rivers, 1979-1983[1].

Site-Species	Percent of Total Fish Targets					Fifty Percent Passage Date				
Bank	1979	1980	1981	1982	1983	1979	1980	1981	1982	1983
Kenai R. Sockeye										
North Bank	72	61	72	39	42	[2]	7/18	7/14	7/20	7/19
South Bank	28	39	28	61	58	[2]	7/19	7/19	7/21	7/19
Both Banks						7/19	7/18	7/14	7/21	7/19
Kasilof R. Sockeye										
North Bank	53	52	69	73	51	[2]	7/17	7/04	7/19	7/15
South Bank	47	48	31	27	49	[2]	7/16	7/02	7/18	7/17
Both Banks						7/12	7/16	7/04	7/19	7/16
Crescent R. Sockeye										
North Bank	[3]	49	57	54	39	[2]	7/22	7/20	7/21	7/18
South Bank	[3]	51	43	46	61	[2]	7/22	7/20	7/21	7/19
Both Banks						7/17	7/22	7/20	7/21	7/19
Susitna R. Sockeye[5]										
East Bank	23	18	51	[4]	17	7/22	7/22	7/20	7/27	7/19
West Bank	77	82	49	[4]	83	7/22	7/22	7/15	[4]	7/20
Both Banks						7/22	7/22	7/17	[4]	7/20
Susitna R. Pink[5]										
East Bank	71	71	92	[4]	80	7/23	7/30	7/24	7/29	7/24
West Bank	29	29	8	[4]	20	7/22	8/02	7/28	[4]	7/27
Both Banks						7/23	7/30	7/23	[4]	7/24
Susitna R. Chum[5]										
East Bank	91	79	91	[4]	72	7/27	7/29	7/26	7/30	[6]
West Bank	9	21	9	[4]	18	8/21	8/12	8/16	[4]	[6]
Both Banks						7/27	7/30	7/27	[4]	[6]
Susitna R. Coho[5]										
East Bank	47	29	70	[4]	31	7/28	7/30	7/27	7/30	[6]
West Bank	53	71	30	[4]	69	7/25	8/02	8/07	[4]	[6]
Both Banks						7/27	8/02	7/28	[4]	[6]

Table 5. Bank distribution and timing of salmon escapement recorded by side scan sonar in the Kenai, Kasilof, Crescent, and Susitna Rivers, 1979-1982[1] (continued).

---

[1] Based on estimated run timing when counters removed prior to end of sockeye run (Note: counters operated through 8 August only at Susitna Station in 1983).

[2] Daily counts by bank not determined after post-season adjustment of total daily counts.

[3] South bank counts estimated using hourly visual and multiple transducer sonar counts.

[4] Mid-season data loss prevented determination of bank distribution and timing.

[5] Data from Susitna Station only.

[6] Migration timing data not available due to early (8 August) cessation of enumeration activities.

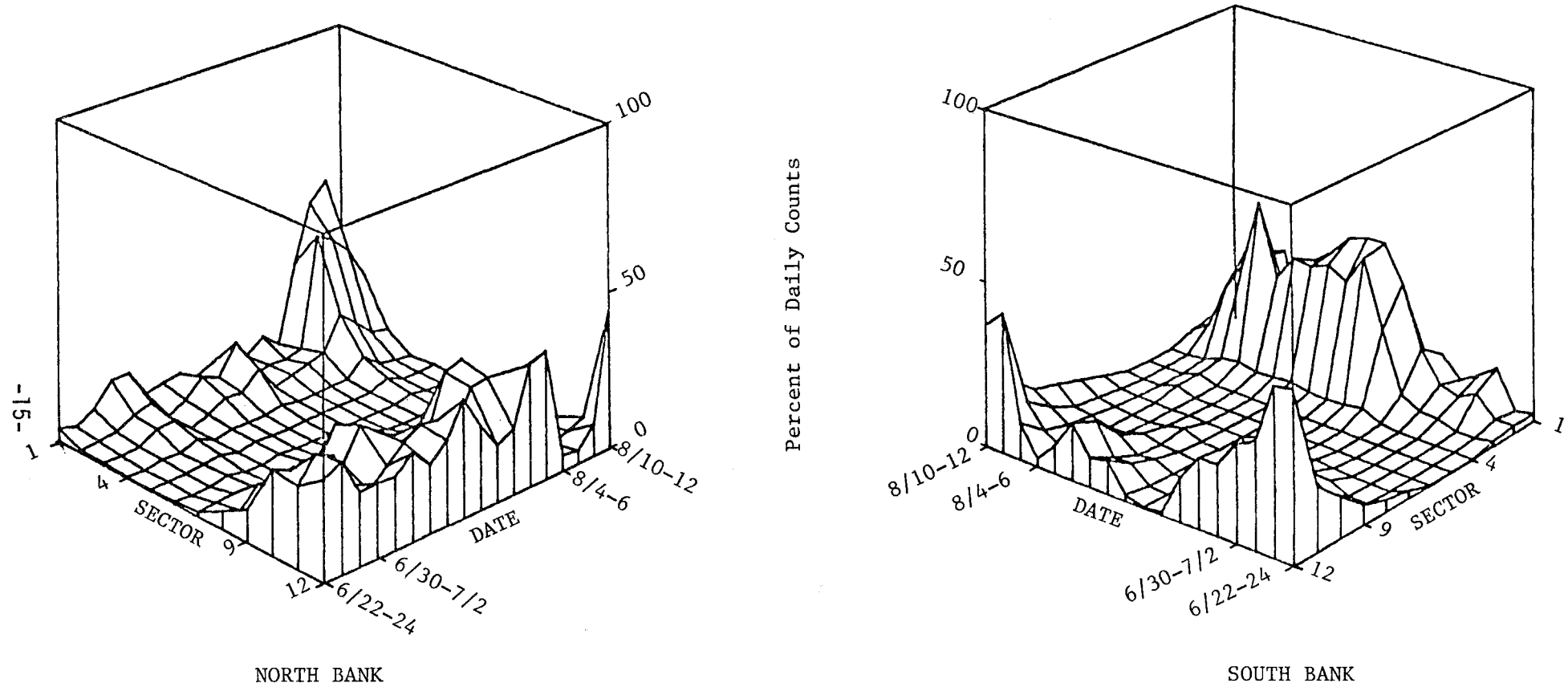

Figure 5. Kenai River side-scan sonar count sector distribution over time (grouped in three-day time periods), 22 June - 12 August 1983. See Appendix Tables 2-5.

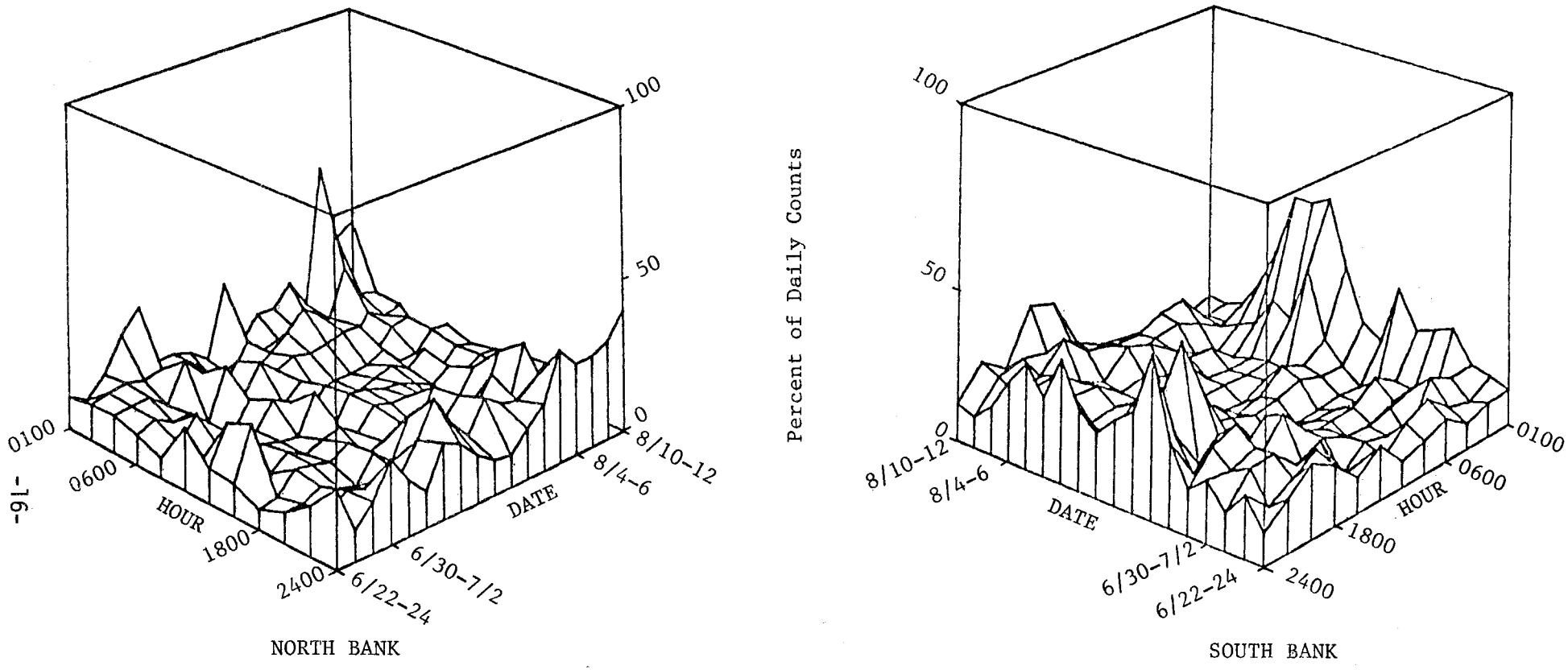

Figure 6. Kenai River side-scan sonar count hourly distribution over time (two-hour increments grouped in three-day time periods), 22 June - 12 August 1983. See Appendix Tables 6-9.

Fish migrating up the north bank showed similar nocturnal movement patterns, however, distribution from shore was skewed to the outer sectors throughout the season. Periodic extension of the side scan sonar counting range beyond the normal operating distance of 20 m showed some fish were migrating in the area immediately beyond the offshore end of the substrate. Adjustment of daily sonar counts by the ratio of counts within 20 m to counts within 30 m increased north bank total fish targets for the season by 20%.

The peak daily passage rate of 88,218 fish at the sonar site occurred on 18 July, one day prior to the midpoint of the run (Table 5). Eighty percent of the escapement occurred in a period of 18 days (Table 6). All three data points are within the historical range. No apparent differences in run timing were discerned between banks of the river at the sonar site (Appendix Tables 10 and 11).

Some differential in return timing to the tributaries was observed at weir sites, with increased distance from the sonar site resulting in a later 50% passage date. Respective 50% passage dates at Hidden Lake, Lower Russian Lake, and Quartz Creek were 30 July (Flagg 1983), 6 August (Nelson 1984), and 6 August (Flagg 1983).

A total of 191 sockeye salmon was tagged at the Kenai River sonar site between 6 August and 12 August 1983. Two tags were recovered from fish entering the Russian River, including one from a fish which was tagged on 10 August and reached the weir at Lower Russian Lake on 30 August.

A total of 1,906 sockeye salmon was captured in fishwheels (Appendix Table 12). Length and weight data were obtained from 619 fish. Average length and weight data by age class and sex, and ratio of males to females sampled is presented in Appendix Tables 13 and 14.

Comparison of age composition by period and between methods (Table 7) indicated very little change in the proportion of the dominant age class regardless of sampling strategy or timing. Variance calculations performed for the major age class proportion (1.3) generated by each method indicated that Method I had the least variance associated with the estimated number of age 1.3 sockeye salmon. Therefore, this method was used to characterize the age composition of the escapement. The Kenai River sockeye salmon escapement was made up primarily of age 1.3 fish (79.1%) with smaller components of age 1.2 (8.2%) and 2.3 (8.9%) fish (Table 8).

Sonar counts attributed to pink salmon, coho salmon, and chinook salmon (Appendix Table 1) are considered minimum estimates. Run timing, counter limitations, and spawning site locations relative to the sonar site are factors discussed in Tarbox et al. (1981 and 1983) which influence accuracy of escapement estimates for these species. No additional mainstem pink salmon, coho salmon, and chinook salmon escapement estimates were made, but available information concerning tributary spawning populations is summarized in Table 4.

Sockeye salmon sonar counts appear to be a relatively accurate measurement of escapement within the Kenai River drainage. The magnitude of the run and short duration of entry are ideal for counting with the Bendix system. Despite the less than ideal shore oriented behavior exhibited by fish migrating up the north bank oscilloscope monitoring during critical passage periods indicated that 93% of the total fish targets counted were within the 20 m normal operating range of side scan sonar.

Table 6. Date of cumulative percent of late run sockeye salmon counts recorded in the Kenai River, 1968-1983[1].

Year	Date by 10% Interval									
	10%	20%	30%	40%	50%	60%	70%	80%	90%	100%
1968	7/08	7/15	7/17	7/18	7/20	7/21	7/23	7/24	7/28	8/08
1969	6/20	6/21	6/23	6/27	7/01	7/06	7/12	7/19	7/28	8/09
1970	6/28	7/13	7/15	7/22	7/25	7/27	7/29	8/01	8/03	8/09
1972	7/17	7/21	7/22	7/23	7/24	7/25	7/26	7/27	7/29	8/01
1973	7/12	7/15	7/19	7/21	7/22	7/23	7/24	7/26	7/28	8/09
1974	7/04	7/08	7/12	7/16	7/17	7/21	7/25	7/28	8/02	8/07
1975	7/15	7/19	7/21	7/23	7/24	7/26	7/28	7/30	8/01	8/06
1976	7/09	7/15	7/19	7/20	7/20	7/21	7/22	7/24	7/28	8/25
1977	7/11	7/13	7/14	7/15	7/16	7/18	7/20	7/23	7/28	8/04
1978	7/16	7/17	7/17	7/18	7/19	7/20	7/21	7/26	8/01	8/23
1979	7/15	7/17	7/18	7/19	7/19	7/20	7/21	7/22	7/25	8/16
1980	7/17	7/17	7/17	7/18	7/10	7/19	7/20	7/21	7/22	9/05
1981	7/07	7/10	7/13	7/14	7/16	7/18	7/19	7/21	7/25	[2]
1982	7/18	7/19	7/19	7/20	7/21	7/23	7/25	7/27	7/29	[3]
1983	7/15	7/16	7/18	7/18	7/19	7/20	7/21	7/23	8/01	8/12

[1] Date on which percentage level equaled or exceeded.

[2] Estimated 1% of the escapement occurred after 2 August (end of enumeration period).

[3] Estimated 4% of the escapement occurred after 4 August (end of enumeration period).

Table7. Comparison of three methods of determining age composition of sockeye salmon collected in the Kenai River, 1983.

	Percent Composition by Age Class								
Method	1.1	0.3	1.2	2.1	1.3	2.2	1.4	2.3	3.3
I[1]	0.4	0.4	8.2	0.5	79.1	2.2	0.2	8.9	0.1
II[2]	0.7	0.2	8.8	1.0	78.6	2.1	0.3	8.2	0.1
III[3]	0.4	0.3	8.2	0.2	79.4	2.2	0.2	9.0	0.1

[1] Method I - All age composition samples lumped together; age composition not weighted to numbers in escapement.

[2] Method II - Combined, weighted age compositions from four periods using data from all dates within each period.

[3] Method III - Combined, weighted age composition from four periods using data from one or more, but not all, dates within each period.

Table 8. Age composition of sockeye salmon collected in the Kenai River, 1969-1983.

Seasonal Summary	Percent Composition by Age Class								Sample Size
	1.1	1.2	1.3	1.4	2.1	2.2	2.3	Other	
1969	tr	9.0	36.0	2.0	3.0	36.0	13.0	tr	382
1970	tr	10.0	17.0	tr	26.0	25.0	15.0	6.0	225
1971		8.0	39.0	1.0	3.0	38.0	11.0		168
1972		21.0	34.0			23.0	20.0		403
1973		5.0	68.0	1.0	1.0	8.0	16.0		632
1974	2.0	18.0	46.0		3.0	18.0	12.0		295
1975	2.0	10.0	36.0	2.0	4.0	31.0	14.0	1.0	163
1976	1.0	46.0	20.0		2.0	22.0	8.0	1.0	948
1977		6.0	76.0	1.0	tr	7.0	10.0		1,265
1978[2]		2.5	86.7			4.9	5.4	tr	811
1979[1]	tr	20.2	61.1			11.8	6.2	tr	601
1980[1]		27.7	45.1			16.2	10.1	tr	715
1981[1]		16.2	70.9			8.1	4.8		1,757
1982[1]	0.1	5.8	87.5	tr		2.9	3.7		1,787
1983	0.4	8.2	79.1	0.2	0.5	2.2	8.9	0.4	1,765

[1] Percentages weighted by total numbers of fish in escapement.

[2] 1978 weighted - Source: Bethe et al. (1980).

Kasilof River

A total of 185,650 fish targets was counted at the Kasilof River sonar site from 11 June through 31 July 1983 (Appendix Tables 15-26). The apportioned sockeye salmon count of 177,463 (Appendix Table 15) was expanded to account for fish migration into the system prior to 11 June and after 31 July, resulting in a total sockeye salmon escapement estimate of 210,271 (Table 1). This total exceeds the maximum escapement goal of 150,000 fish by approximately 40% and represents the fifth consecutive year the maximum escapement goal had been exceeded.

The Fisheries Rehabilitation, Enhancement, and Development Division Crooked Creek Hatchery contribution to the escapement was estimated to be approximately 30,000 fish (Flagg 1983). Adults returning in 1983 used for artificial propagation numbered 9,903, reducing the number of potential natural spawners to 200,368 (Table 9).

Approximately 68% of the estimated sockeye salmon escapement was enumerated in clearwater tributaries of Tustumena Lake (Table 10). Estimated escapement number, and percentage of total escapement (Table 11), calculated for each tributary, were within historical ranges. However, estimated spawner numbers in Glacier Flat, Seepage, Moose, and Bear Creeks exceeded optimum spawner densities calculated by Namtvedt and presented in Tarbox et al. (1983).

The midpoint of the sockeye escapement occurred on 16 July (Table 5), 1 day later than the mean 50% date since 1968 (Table 12). Approximately 80% of the escapement occurred in 31 days, consistent with the trend towards increased run duration observed since 1979 (reported in Tarbox et al. 1983). The historical range of midpoint and run duration values (2 July 1969 to 23 July 1972 and 10 days in 1972 to 35 days in 1980, respectively) masked any change in values which may have been due to movement of the counting site downstream. No appreciable differences in run timing were discerned between fish migrating up each bank of the river (Table 5 and Appendix Tables 16 and 17).

Spawning ground tag recovery data are presented in Appendix Table 18 and summarized in Figure 7. When the percentage of total tags recovered in Tustumena Lake tributaries (grouped by date of tagging at the sonar site) was expressed in number of fish enumerated by sonar during each tagging period, some general trends were seen. (Note: tag recovery effort was variable; there were weirs only on Bear and Glacier Flat Creeks). It appears that individual tributary returns generally overlap in timing at the sonar site, but peaks vary slightly with a sequence of Nikolai, Bear, and Glacier Flat Creeks as the season progresses.

Tag recovery data were also examined to determine mean lake residence time in days of fish bound for Bear and Glacier Flat Creeks (Table 13). It appears that, as might be expected, travel time (residence time) was greater for fish bound for Glacier Flat Creek. There was also a tendency for residence time to be shorter as the season progressed. For example, Bear Creek sockeye salmon tagged 17-30 June averaged 34.8 days between the sonar site and weir while those fish tagged between 19-27 July had a mean lake residence time of 18.6 days.

Table 9. Kasilof River sockeye salmon escapement summary, 1968-1983.

Year	Sonar Count[1]	Fish Used for Artificial Propagation of Tustumena Lake	Sonar Count Less Egg Take[3]
1968	89,000		
1969	46,000		
1970	38,000		
1971	--		
1972	113,000		
1973	40,000		
1974	70,000	205[2]	69,795
1975	48,000	3,365[2]	44,635
1976	139,000	5,463[2]	133,537
1977	155,300	1,794[2]	153,506
1978	116,600	6,681[2]	109,919
1979	152,179	3,024[2]	149,155
1980	187,154	6,030[2]	181,124
1981	256,625	9,700[4]	246,619
1982	180,239	11,571[4]	168,668
1983	210,271	9,903[4]	200,368

[1] Multiple transducer sonar counts rounded to the nearest thousand (1968-1977) from Namtvedt et al. (1979). Side scan sonar counts (1978-1981) from Tarbox et al. (1983).

[2] From Cross et al. (1983).

[3] Considered estimate of natural spawners above sonar site.

[4] Waite, pers. comm.

Table 10. Peak sockeye salmon escapement counts in seven index areas, Kasilof River drainage, 1975-1983[1].

Year	Nikolai	Crystal	Clear	Glacier Flat	Seepage	Moose	Bear	Total Index Count
1975	5,700	400	300	14,400	3,700	3,300	27,700	55,500
1976	12,000	800	300	7,100	800	14,000	51,800	86,800
1977	29,100	600	1,800	5,800	800	16,600	58,000	112,700
1978	34,200	200	200	4,700	1,100	15,900	43,400	99,700
1979	19,100	500	400	5,600	800	8,100	35,900	70,400
1980	10,000	1,000	2,100	15,500[2]	1,800	15,600	125,000[2]	171,400
1981	36,000	860	2,978	40,071[2]	3,376	12,968	75,117[2]	171,400
1982	16,800	1,785	4,183	17,348[2]	1,638	13,400	51,350[2]	106,500
1983	17,100	1,657	860	38,776[2]	3,305	19,245	61,957[2]	142,900

[1] Counts standardized to common unit for years entire stream was not surveyed. Relative abundance per section (when entire system surveyed) was used to extrapolate for years when only a portion of stream was surveyed. Numbers rounded to nearest hundred fish.

[2] F.R.E.D. Division weir count.

Table 11. Distribution (percent)[1] of sockeye salmon in the major index tributary systems of Tustumena Lake, 1975-1983.

Year	Nikolai	Moose	Bear	Glacier Flat	Other
1975	10.2	5.9	49.9	25.9	8.1
1976	13.8	16.2	59.8	8.2	2.0
1977	25.8	14.7	51.5	5.1	2.9
1978	34.3	15.9	43.5	4.7	1.6
1979	27.1	11.5	51.0	7.9	2.5
1980	5.8	9.1	73.1	9.0	3.0
1981	21.0	7.6	43.8	23.3	4.3
1982	15.8	12.6	48.2	16.3	7.1
1983	12.0	13.5	43.4	27.1	4.0

[1] Percent of total index count.

Table 12. Date of cumulative percent of sockeye salmon counts recorded in the Kasilof River, 1968-1983[1].

Year	Date by 10% Interval									
	10%	20%	30%	40%	50%	60%	70%	80%	90%	100%
1968	7/04	7/06	7/08	7/11	7/12	7/14	7/17	7/20	7/23	7/31
1969	6/25	6/25	6/30	7/02	7/02	7/06	7/11	7/18	7/25	8/09
1970	6/27	7/03	7/07	7/09	7/12	7/14	7/17	7/23	7/27	8/06
1972	7/15	7/21	7/22	7/22	7/23	7/23	7/24	7/24	7/25	8/03
1973	7/04	7/09	7/11	7/13	7/15	7/18	7/20	7/23	7/26	8/05
1974	7/04	7/05	7/06	7/08	7/11	7/13	7/17	7/23	7/28	8/07
1975	7/05	7/07	7/09	7/13	7/16	7/19	7/21	7/24	7/28	8/07
1976	7/06	7/07	7/10	7/13	7/16	7/19	7/20	7/22	7/28	8/09
1977	7/04	7/08	7/11	7/12	7/14	7/15	7/17	7/20	7/25	8/04
1978	6/30	7/03	7/06	7/09	7/16	7/17	7/17	7/18	7/20	8/06
1979	6/28	7/02	7/05	7/07	7/12	7/15	7/19	7/23	7/27	8/14
1980	6/30	7/02	7/05	7/11	7/16	7/18	7/21	7/25	8/03	8/14
1981	6/18	6/24	6/28	7/01	7/04	7/07	7/10	7/14	7/20	[2]
1982	7/03	7/13	7/16	7/17	7/19	7/20	7/21	7/27	[3]	
1983	7/01	7/07	7/12	7/14	7/16	7/17	7/18	7/22	[4]	

[1] Date on which percentage level equaled or exceeded.

[2] Estimated 2% of the escapement occurred after 31 July (end of enumeration period).

[3] Estimated 11% of the escapement occurred after 3 August (end of enumeration period).

[4] Estimated 12% of the escapement occurred after 31 July (end of enumeration period).

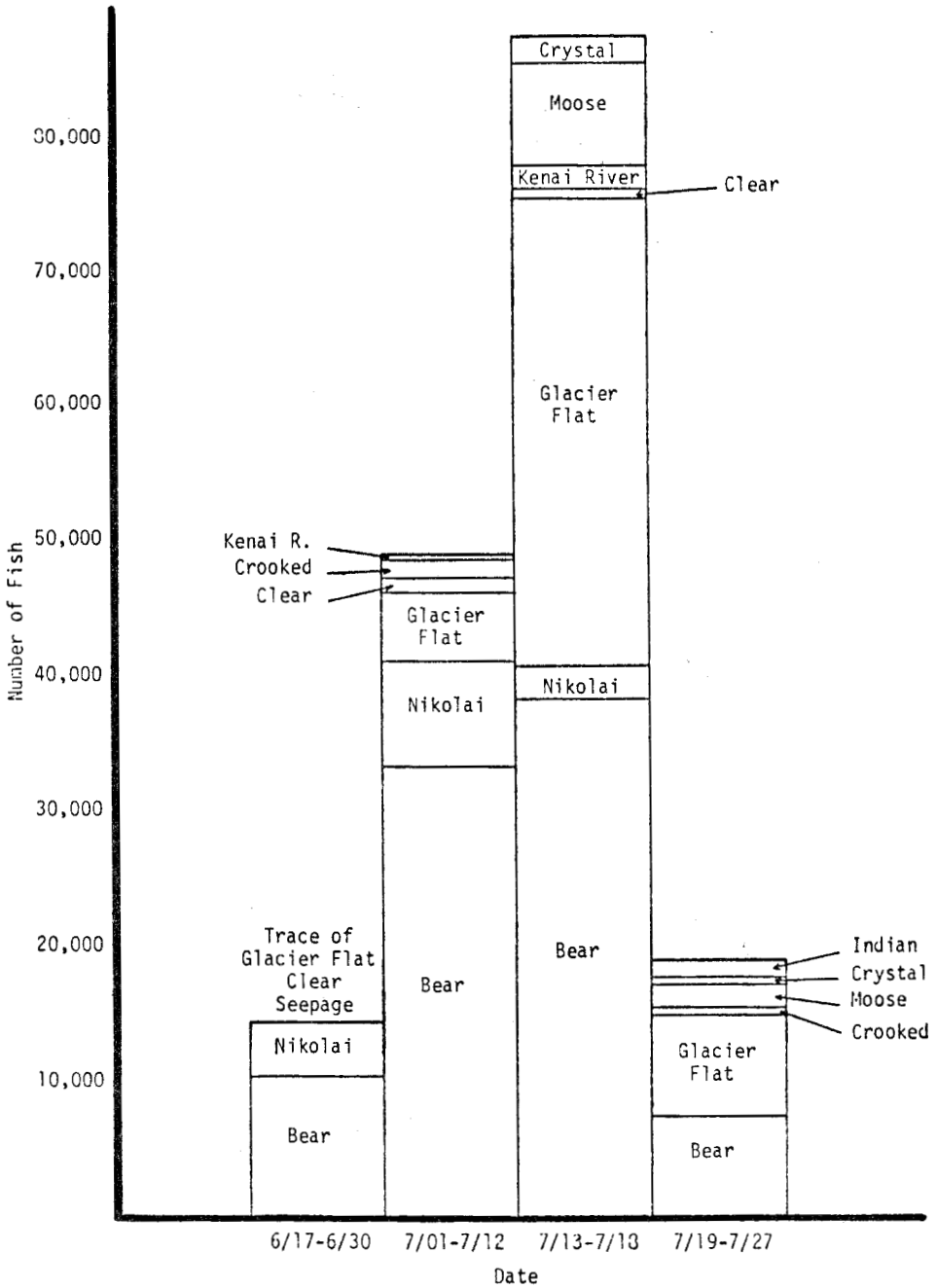

Figure 7. Percent of total tags recovered by spawning area (grouped by date of tagging at the Kasilof River sonar site) expressed in number of fish enumerated by sonar during each tagging period. Note: A small proportion of tags were recovered in spawning areas outside of Tustumena Lake.

Table 13. Mean residence time in Tustumena Lake of sockeye salmon bound for Glacier Flats and Bear Creeks, 1983[1].

Tributary	Period	# Tags Recovered	Mean Residence Time	Range
Glacier Flats Creek	6/17 - 6/30	0	--	--
	7/01 - 7/12	9	32.1	24 - 41
	7/13 - 7/18	41	25.2	19 - 37
	7/19 - 7/27	13	19.4	7 - 28
Bear Creek	6/17 - 6/30	26	34.8	31 - 40
	7/01 - 7/12	52	27.8	22 - 39
	7/13 - 7/18	30	23.3	14 - 30
	7/19 - 7/27	9	18.6	12 - 24

[1] Fish tagged at the Kasilof River bridge sonar site.

In contrast to 1982, a relatively large (25%) percentage of tagged fish were recovered downstream from the sonar site. This component was made up primarily of fish taken by commercial set netters immediately below and above the mouth of the Kasilof River (43% and 39%, respectively), but also included captures by the drift fleet, and escapement to the Crooked Creek Hatchery and Kenai River. Two reasons exist which may in part explain this "drop back" phenomena. These are: (1) stress due to tagging may have weakened or disoriented fish, or (2) some component of the escapement has misdirected and returned downstream toward the correct spawning area of origin after the tagging process. No data exists to evaluate if either or both of these reasons may have caused the drop out.

Run timing, counter limitations, and spawning locations relative to the sonar site are factors which prevent escapement estimates for Kasilof River pink salmon, coho salmon, and chinook salmon. Weir counts of chinook salmon and coho salmon were, however, conducted by the F.R.E.D. Division for Crooked Creek (a lower river tributary of the Kasilof River). A total of 8,666 chinook salmon of Crooked Creek origin was enumerated in 1983 (Flagg 1983), including the sport fish harvest (4,361 fish) and weir counts (4,305 fish). Of the 8,666 estimated adults returning, over 68% are thought to be of hatchery origin. Information on run timing at the weir is available in Flagg (1983). The coho salmon count at the Crooked Creek weir was 1,141 (Bob Och, pers. comm.).

Migratory behavior data analysis revealed bank selection and hour distribution patterns similar to those exhibited over the previous five seasons (Table 5 and Figure 8). Sector distribution problems seen at the upriver slackwater site were not apparent at the new site as approximately 91% of the north bank and 82% of the south bank total counts were recorded within 5 m of the transducer (Figure 9). There was, however, a slight tendency towards offshore distribution early in the season (prior to 1 July; Appendix Tables 24 and 26).

A total of 3,026 salmon was captured in fishwheels at the Kasilof River sonar site from 17 June to 28 July (Appendix Tables 27 and 28), including 2,923 sockeye salmon. Age 1.2 (48.4%) and 1.3 (34.3%) fish were the dominant sockeye age classes, with a definite shift in relative percentage as the season progressed (Table 14). A comparison of methods used to derive seasonal age composition (Table 15) shows a definite bias when all samples are combined (Method I). Examination of the data suggests seasonal age composition generated by Methods II and III are the same. Results from Method II were selected to represent the escapement because variances associated with the proportions of major age classes derived by this method were smaller than those derived with Method III. Average length and weight data by age class, and sex ratios (males to females) are presented in Appendix Tables 29 and 30.

It appears from the data gathered that sockeye salmon sonar counts are a relatively accurate measure of escapement within the Kasilof River drainage. Shore oriented migratory behavior coupled with relatively high water velocities during the major portion of the run probably resulted in most fish moving through the hydroacoustic beam. Additionally, the predominance of sockeye salmon in fishwheel catches indicated this was primarily a single species system during the period of enumeration, and finally, documented sockeye salmon spawning areas are above the new sonar site.

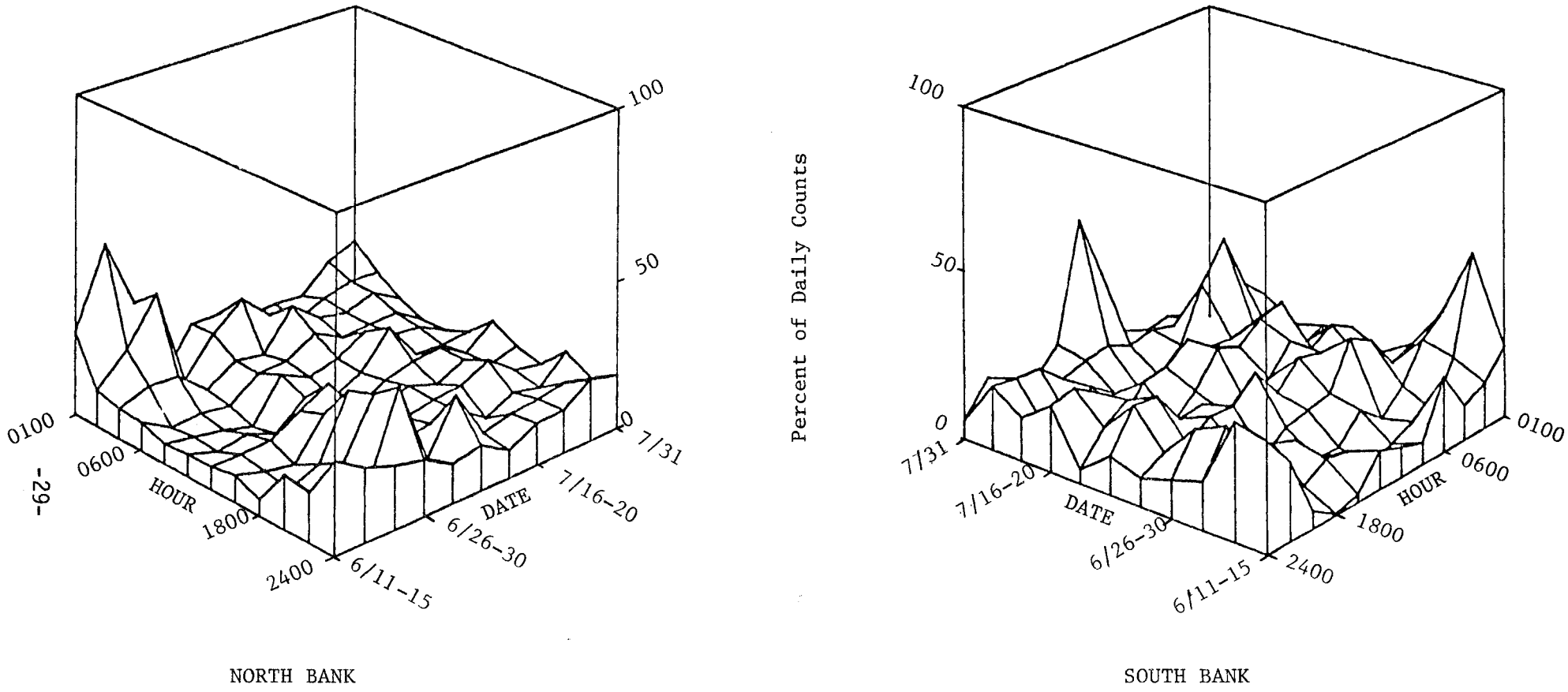

NORTH BANK

SOUTH BANK

Figure 8. Kasilof River side-scan sonar count hourly distribution over time (two-hour increments grouped in five-day time periods), 11 June - 31 July 1983. See Appendix Tables 19-22.

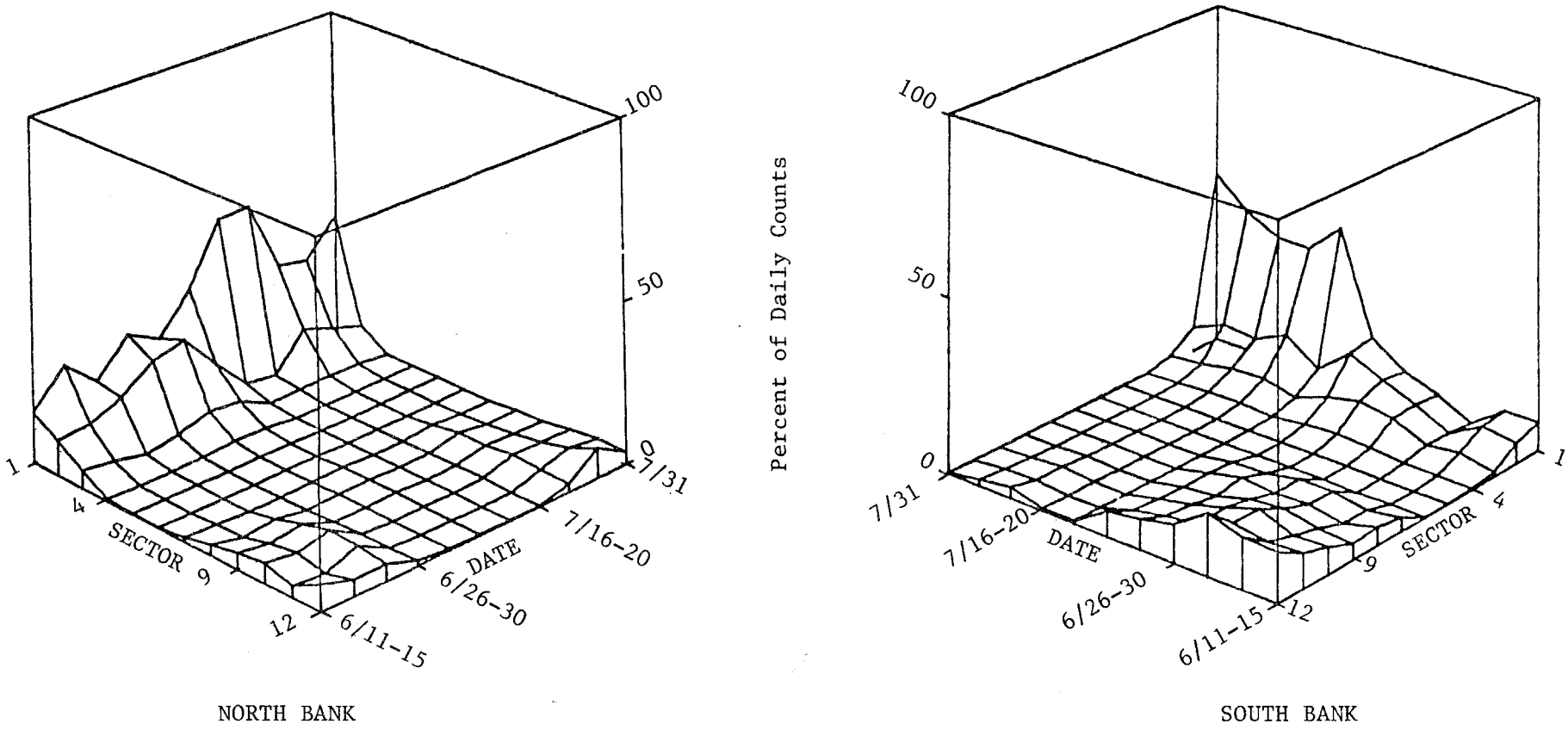

NORTH BANK

SOUTH BANK

Figure 9. Kasilof River side-scan sonar count sector distribution over time (grouped in five-day time periods), 11 June - 31 July 1983. See Appendix Tables 23-26.

Table 14. Age composition of sockeye salmon collected in the Kasilof River, 1969-1983[1].

Sample Period	Percent Composition by Age Class								Sample Size
	1.1	1.2	1.3	1.4	2.1	2.2	2.3	Other	
6/11 - 7/14/83		20.4	66.8			5.6	7.2		515
7/05 - 7/15/83		53.1	31.9			9.8	5.2		527
7/16 - 7/18/83		52.1	26.7			17.0	4.2		650
7/19 - 7/21/83		68.0	11.7			18.9	1.4		305
Seasonal Summary									
1969		14.0	39.0	1.0		30.0	16.0		399
1970	tr	32.0	37.0	2.0		16.0	11.0	1.0	297
1971		6.0	69.0			8.0	16.0		153
1972	tr	42.0	36.0	1.0	tr	3.0	18.0	tr	668
1973		20.0	57.0			19.0	4.0		374
1974		35.0	59.0		tr	4.0	2.0		254
1975	1.0	29.0	7.0			58.0	4.0	1.0	931
1976	tr	32.0	20.0		tr	35.0	12.0		755
1977	tr	30.0	30.0		1.0	28.0	11.0		1,209
1978		42.0	35.0			14.0	9.0		967
1979[1]		52.2	37.2		tr	8.4	1.7	tr	590
1980[1]		58.7	27.8			8.0	4.5	1.0	899
1981[1]		30.2	62.2			6.0	1.6		1,479
1982[1]	1.0	34.0	49.5		0.1	10.7	4.7	0.1	1,518
1983[1]		48.4	34.3			12.8	4.5		1,997

[1] Percentages weighted by total numbers in escapement.

Table 15. Comparison of three methods of determining age composition of sockeye salmon collected in the Kasilof River, 1983.

Method	Percent Composition by Age Class			
	1.2	1.3	2.2	2.3
I[1]	29.9	55.8	7.4	6.9
II[2]	48.4	34.3	12.8	4.5
III[3]	50.5	31.5	14.0	4.0

[1] Method I - All age composition samples lumped together; age composition not weighted to numbers in escapement.

[2] Method II - Combined, weighted age compositions from four periods using data from all dates within each period.

[3] Method III - Combined, weighted age composition from four periods using data from one or more, but not all, dates within each period.

Crescent River

A total of 87,231 fish targets was enumerated entering Crescent Lake from 1 July through 31 July 1983 (Appendix Tables 31-42). The apportioned sockeye salmon count of 87,010 (Appendix Table 31) was expanded to 92,343 to account for fish passing the sonar site after 31 July (Table 1). This escapement estimate exceeded the escapement goal of 50,000 established in 1979 (Tarbox et al. 1983) by 85%.

As expected from previous years' observations, the majority (97% on the north bank and 97% on the south bank) of fish targets were recorded within 3 m of the transducer (Figure 10). Peaks in hourly passage rate occurred between 0900 hour and 1800 hour (Figure 11).

The peak daily passage rate of 5,549 fish, and the midpoint of the escapement occurred on 19 July (Table 5), 1 day prior to the historic mean 50% passage date. No differences in migratory timing was apparent by bank (Appendix Tables 40 and 41). Approximately 80% of the run into the lake passed the sonar counters in 22 days (Table 16), 2 days less than the mean for the previous 4 years (1979-1982).

Adjusted fishwheel and seine catches are reported in Appendix Table 42. Age composition (based on 731 samples) was primarily age 1.3 sockeye salmon (42.2%) but also included relatively large proportions of age 2.2 (27.4%) and 2.3 (13.6%) fish which are not commonly observed in this system (Table 17). Average length and weight by sex and age class, and the ratio of males to females for sockeye salmon sampled are presented in Appendix Tables 43 and 44.

Sockeye salmon sonar counts appear to be a relatively accurate measure of escapement into Crescent Lake. River conditions (notably velocity) dictate inshore migration, placing fish within the hydroacoustic beam. Passage of fish primarily during daylight hours allowed visual monitoring of the escapement and subsequent precise adjustment of sonar counters.

Susitna River

Salmon escapement estimates by species reported for 1983 are a compilation of data gathered for the Susitna Hydroelectric Project (ADF&G 1984) as well as information from Upper Cook Inlet sonar operations at Susitna Station.

Several problems occurred in 1983 which affected data gathering success and subsequent escapement estimates at Susitna Station. Prior to the season, a decision was made to run the west bank counter in close proximity to a site which was lost in high water in 1982 (King and Tarbox 1983). This decision was made after examination of several potential areas within proximity of Susitna Station. Although the potential existed for problems similar to those experienced in 1982, it was felt that a more suitable site was not available. General field and oscilloscope observations indicated that the west bank site exhibited some degree of substrate flutter and target loss throughout the period of operation. This evidence suggested a drop-off in bottom contour (substantiated by bottom profiles) near the end of the substrate which resulted in a weak and flucuating target. Attempts to stabilize the substrate were effective only during stable water-level periods which occurred infrequently on the Susitna River. The net result of the inability to stabilize the target was probably a loss of data because

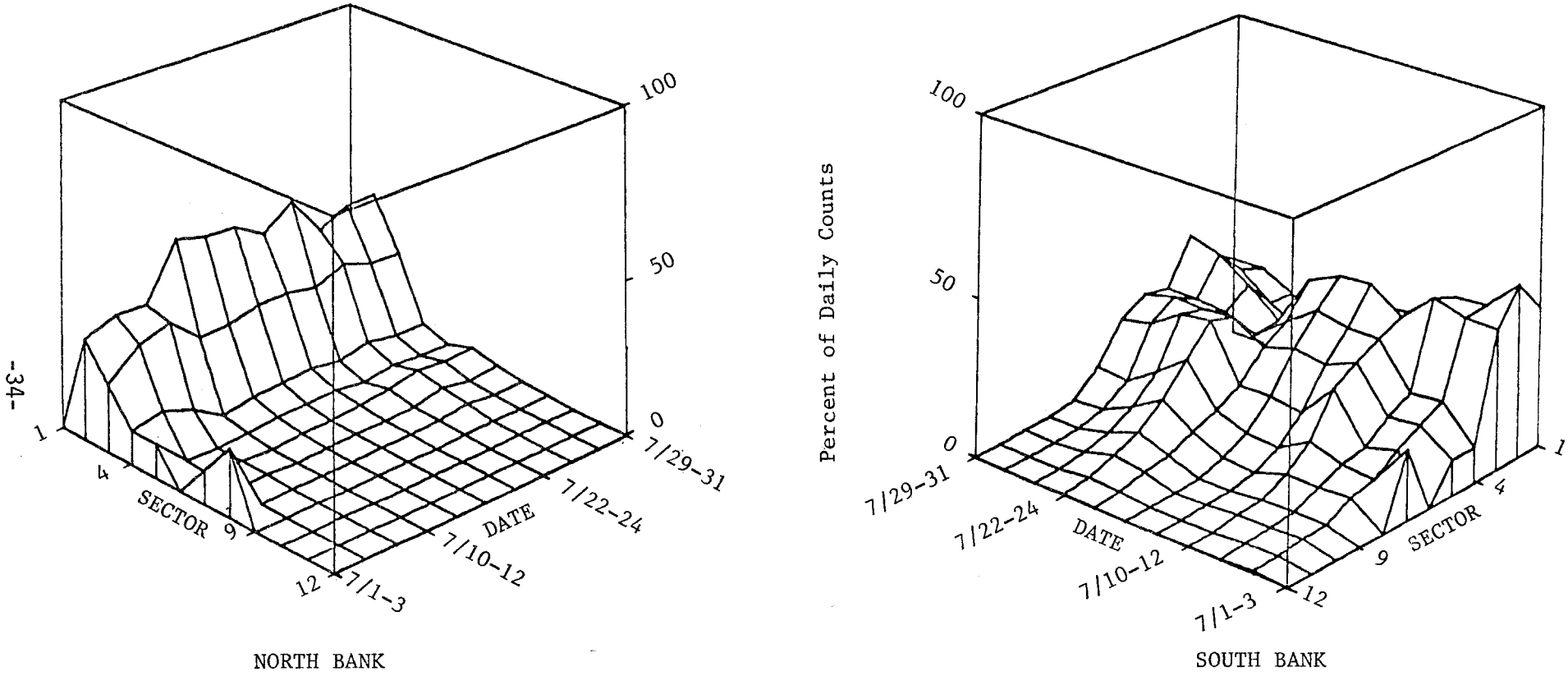

Figure 10. Crescent River side-scan sonar count sector distribution over time (grouped in three-day time periods), 1 July - 31 July 1983. See Appendix Tables 32-35.

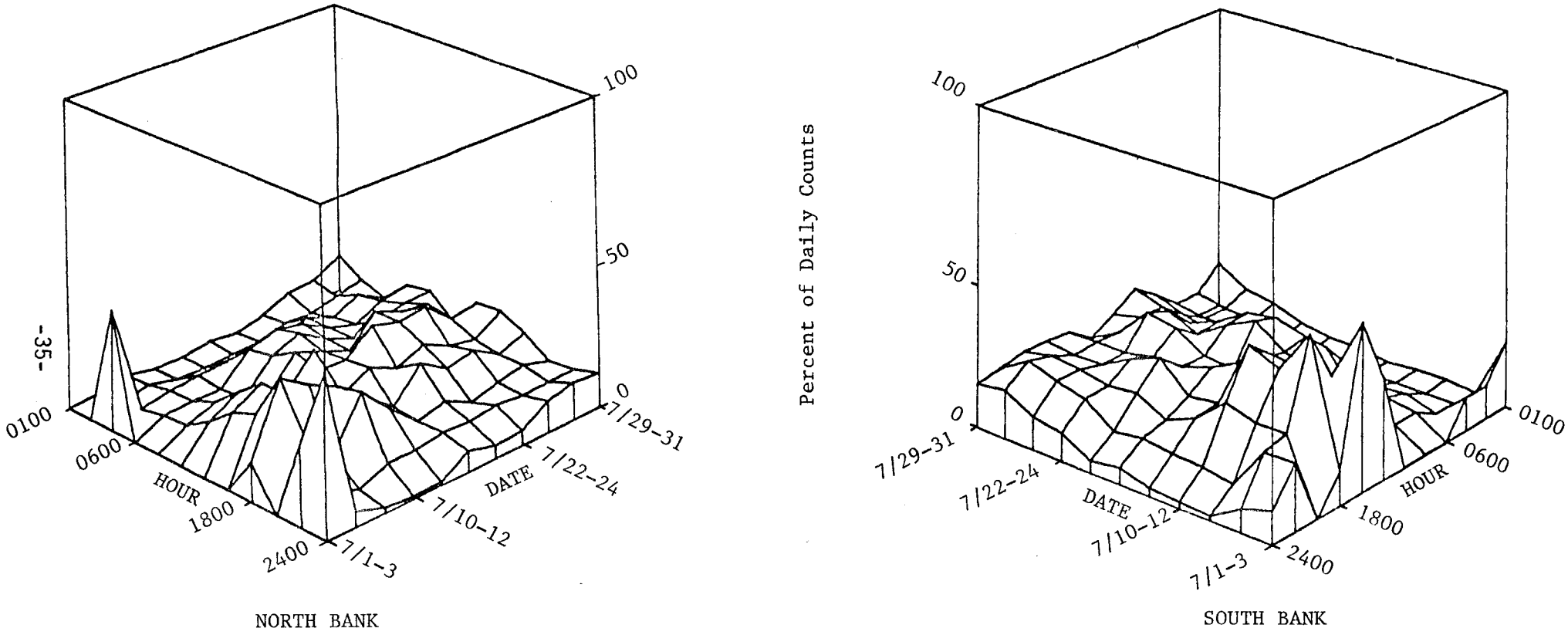

Figure 11. Crescent River side-scan sonar count hourly distribution over time (two-hour increments grouped in three-day time periods), 1 July - 31 July 1983. See Appendix Tables 36-39.

Table 16. Date of cumulative percent of sockeye salmon counts recorded in the Crescent River, 1979-1983[1].

Year	Date by 10% Interval									
	10%	20%	30%	40%	50%	60%	70%	80%	90%	100%
1979	7/09	7/11	7/12	7/14	7/17	7/20	7/22	7/24	7/31	8/13
1980	7/12	7/18	7/20	7/21	7/22	7/24	7/26	7/29	8/03	8/15
1981	7/06	7/12	7/16	7/19	7/21	7/22	7/24	7/29	8/04	[2]
1982	7/11	7/14	7/18	7/20	7/21	7/23	7/25	7/28	[3]	
1983	7/09	7/12	7/14	7/16	7/19	7/20	7/22	7/26	7/30	[4]

[1] Date on which percentage level equaled or exceeded.

[2] Estimated 3% of the escapement occurred after 9 August (last date of operation).

[3] Estimated 11% of the escapement occurred after 31 July (last date of operation).

[4] Estimated 6% of the escapement occurred after 31 July (last date of operation).

Table 17. Age composition of sockeye salmon collected in the Crescent River, 1979-1983.

Year	Percent Composition by Age Class								Sample Size
	1.1	1.2	1.3	1.4	2.1	2.2	2.3	Other	
1979[1]	tr	27.8	70.1			tr	tr	tr	643
1980[1]		6.5	86.9			2.9	1.6	2.1	511
1981[1]		8.2	32.1			9.6	49.9	tr	1,117
1982		12.9	79.2	.10		0.8	7.0		711
1983		10.9	42.2	0.2	0.7	27.4	18.6		731

[1] Percentages weighted by total numbers in escapement.

of slight missaiming of the transducer which occurred as the substrate changed configuration during periods of fluctuating water levels. Coupled with some degree of offshore migration, and data loss due to bank cave-in which caused cessation of counting in early August, the net result of these problems was low total west bank fish target counts relative to Yentna Station.

The east bank site, although stable and conducive to sonar substrate placement, exhibited sector distribution problems not seen in previous years. Although increased river velocity in mid-season improved the fish distribution, it appears that substantial offshore migration outside the counting range of the sonar did occur. An effort was made to quantify offshore migration by periodically extending the counting range to 30 m and adjusting daily counts accordingly. This procedure improved escapement estimates to some degree, but did not account for mid-river migration (past 30 m), or migration in the upper portions of the water column.

Accuracy of salmon escapement estimates presented for the Susitna River in 1983 is discussed in relation to the above information in addition to potential problems associated with Susitna Hydroelectric Project estimates. In all cases, estimates are not considered absolute escapement counts for the river because of inherent problems in all estimation techniques, and distribution of spawners into tributaries below and between enumeration sites.

Sockeye Salmon:

An escapement range of 112,314 to 176,200 late run sockeye salmon was estimated for the Susitna River in 1983 (Table 1). The lower value represents the apportioned sonar counts (Appendix Tables 45-54) from Susitna Station (Appendix Table 45), and the upper value a combination of Yentna Station sonar counts and the Sunshine Station mark-recapture (Peterson) estimate (ADF&G 1984; Appendix Table 46). The Susitna Hydroelectric Project also enumerated an early run of sockeye salmon totaling 3,300 fish which reached a midpoint in migration (based on fishwheel catch) on 10 June at Sunshine Station (ADF&G 1984). The escapement goal for sockeye salmon established in 1979 (Tarbox et al. 1983) is 200,000 late run fish. Additional sockeye salmon escapement estimates made for various points on the mainstem Susitna River above Susitna Station for the Susitna Hydroelectric Project are also presented in Appendix Table 46.

Spawning ground surveys in index areas accounted for approximately 35,600 sockeye salmon (Table 18). Counts within most tributaries were comparable in magnitude with previous years. A significantly higher count in Red Shirt Lake is likely due to survey timing. In 1983 the survey timing allowed enumeration of fish in large schools below the lake prior to dispersal. The weak return to Chelatna Lake relative to the previous three years was substantiated by on-ground interviews with local residents.

The difficulty of obtaining accurate escapement estimates from aerial survey of lake spawning areas was evident in the counts for Shell Lake. Prior to entry into the lake, 12,000 sockeye salmon were observed in Shell Creek (Table 19). The peak count of spawners in the lake was 2,811 fish or approximately 23% of the number of fish seen in the outlet creek. Results from additional spawning ground surveys conducted for the Susitna Hydroelectric Project and other projects in the Susitna

Table 18. Peak sockeye salmon escapement counts in Susitna River tributary index areas, 1973-1983.

Index Area	Year										
	1973	1974	1975	1976	1977	1978	1979	1980	1981	1982	1983
Byers Lake	[1]	[1]	[1]	50	300	[1]	[1]	[1]	275	[1]	[1]
Talachulitna River[2]	12,362	6,186	5,105	13,210	25,935	14,308	11,696	21,125	9,926	14,560	9,590
Trinity-Movie Lakes	75	0	0	42	186	150	195	200	500	138	260
Shell Lake	295	20	251	344	247	127	1,480	5,800	6,050	3,150	2,811
Hewitt-Whiskey Lakes[3]	1,073	1,047	751	2,289	792	1,998	1,205	3,250	9,850	2,675	3,425
Red Salmon Lake	250	160	142	376	372	235	480	1,100	1,212	1,000	150
Puntilla Lake	[1]	[1]	[1]	[1]	2,100	1,105	90	550	200	[1]	[1]
West Fork Yentna River	[1]	[1]	[1]	550	4,000	6,000	456[4]	5,500	9,000	10,340	9,660
Chelatna Lake[5]	11	0	4	[4]	171	0	0[4]	4,120	14,000	23,180	520
Fish Lake	251	95	187	82	611	299	100[6]	2,100	176	280	[1]
Clear Creek[7] [8]	[1]	[1]	[1]	30	75	310	365	320	450	2,060	1,315
Stephan-Murder Lakes[9]	255	115	261	462	539	1,142	140	220	475	452	[1]
Larson Lake	20	19	63	85	330	117	160	[1]	4,600	2,150	1,200
Swan Lake[10]	310	386	465	516	827	917	40[6]	[4]	350	760	340
Red Shirt Lake[11]	47	1	159	215	43	13	645	650	505	100	6,350
Susitna River Drainage Total Index Area Escapement[12]	15,000	8,000	7,400	18,400	36,500	26,800	17,100	44,900	58,000	60,800	35,600

1 No counts conducted.
2 Includes counts from Upper Talachulitna Creek, Talachulitna Lake, Talachulitna Creek, North and South Judd Springs, Judd Spring No. 2, Judd Lake, and Upper Talachulitna River Index Areas.
3 Includes Hewitt Lake, Whiskey Lake, Hewitt Creek, Huckleberry Creek, and Christmas Tree Creek Index Areas.
4 Glacially occluded.
5 Includes Coffee Creek and Snowslide Creek Index Areas.
6 Low visibility-turbid water.
7 Known as Chunilna River in past reports.
8 Includes Mama and Papa Bear Lakes Index Areas.
9 Includes Prairie Creek Index Area.
10 Includes Slim Creek and "T" Creek Index Areas.
11 Includes Role Jo Creek Index Area.
12 Rounded to the nearest 100 fish.

Table 19. Salmon escapement counts in Susitna River tributaries, 1983[1].

Tributary	Peak Count or Escapement Estimate				
	Sockeye	Pink	Chum	Coho	Chinook
Larson Lake					
Fish Lake					
West Fork Yentna River			100[2]	50[2]	
Talachulitna River				15[2]	10,014[3]
Red Salmon Lake					62
Alexander Creek[4]					3,755[3]
Deshka River					19,237[3]
Lake Creek					7,075[3]
Bunco Creek					523[5]
Byers Creek					
Chase Creek		6[5]		6[5]	15[5]
Cheechako Creek					25[5]
Chinook Creek					8[5]
Chulitna River					4,058[3]
Chunilna Creek (Clear Creek)		5,000[2]		100[2]	938[3]
4th of July Creek		78[5]	148[5]	3[5]	6[5]
Gold Creek		7[5]			23[5]
Goose Creek					477[3]
Honolulu Creek					
Indian River		886[5]	722[5]	53[5]	1,193[3]
Jack Long Creek		5[5]	2[5]	1[5]	6[5]
Kashwitna River[6]					297[3]
Lane Creek		28[5]	6[5]	2[5]	12[5]
Little Willow Creek					1,042[3]
Montana Creek					1,641[3]
Portage Creek		285[5]	526[5]	15[5]	3,140[3]
Prairie Creek					3,200[3]
Sheep Creek					975[3]
Spink Creek					
Troublesome Creek					
Willow Creek					775[5]
Fish Creek					
Whiskers Creek				115[5]	3[5]
Lower McKenzie Creek		28[5]	1[5]	18[5]	
McKenzie Creek					
Little Portage Creek		7[5]			
5th of July Creek		9[5]	6[5]		
Skull Creek		1[5]			
Sherman Creek					
Susitna River[7]	1,060		2,950		
Cache Creek					
Answer Creek					
Question Creek					
Unnamed Creek					
Slash Creek				2[5]	
Gash Creek				19[5]	
Devil Creek					1[5]
Canyon Creek					575[5]

-Continued-

Table 19. Salmon escapement counts in Susitna River tributaries, 1983[1] (continued).

Tributary	Peak Count or Escapement Estimate				
	Sockeye	Pink	Chum	Coho	Chinook
Peters Creek					2,272[5]
Shell Creek	12,008[8]	8[8]			
Fish Creek (Yentna)	15,000 - 20,000[8]				250[8]
Trappers Creek	3,000[8]				
Eightmile Creek	15,000[8]				
Deception Creek					121[3]
Moose Creek					452[3]

[1] Not considered total escapement unless indicated.

[2] Data from Commercial Fisheries Division aerial surveys.

[3] Data from Sport Fish Division aerial surveys (Delaney and Hepler 1984).

[4] Includes Wolverine and Sucker Creeks.

[5] Data from Susitna Hydroelectric Project surveys (ADF&G 1984).

[6] North Fork only.

[7] Total escapement estimates based on multiple survey and stream life data. Peak counts totaled 554 sockeye salmon and 1,467 chum salmon.

[8] Data from Cook Inlet Aquaculture Association aerial surveys (Marcuson pers. comm.).

River drainage are presented in Table 19. Of interest are sockeye salmon estimates from two systems not previously known to support large spawning populations: Eight-mile Creek (15,000 sockeye salmon), and Fish Creek (Yentna River tributary - 15,000 to 20,000 sockeye salmon).

Approximately 83% of the fish targets apportioned to sockeye salmon at Susitna Station were counted on the west bank (Table 5). Sector distribution data for this bank indicated that a majority (54%) of the targets were counted within 3 m of the transducer, however, a relatively high proportion (25%) of counts were also recorded in the offshore (4.5 m - 6 m) counting area (Figure 12).

Evaluation of sector distribution information from Susitna Station east bank sonar counts indicated a poor inshore distribution throughout the period of enumeration (greater than 60% of the counts occurred in Sectors 7-12). In an effort to quantify fish migrating outside the standard 20 m counting range, the range was periodically extended to 30 m, and a ratio of counts within 20 m to counts within 30 m established. Data from this exercise indicated that approximately 35% of the fish targets enumerated were migrating between 20 m and 30 m from the transducer. Hourly distribution of counts on both banks was relatively even throughout the day and consistent as the season progressed (Figure 13).

The midpoint of sockeye salmon counts for both banks at Susitna Station combined was 20 July (Table 5), the same date as the historical 50% date (1978-1981). Peak passage dates occurred 1 day prior to the midpoint on the west bank and on the 50% date on the east bank (Appendix Tables 55 and 56). The midpoint of fishwheel catches of sockeye salmon at Yentna Station was 22 July (ADF&G 1984), 2 days after the midpoint of west bank fishwheel catches and sonar counts at Susitna Station. Eighty percent of the fish targets attributed to sockeye salmon were counted in 11 days (Table 20), approximately 1.5 days less than the average from 1978-1981.

Fishwheel catches by bank are summarized in Appendix Tables 57 and 58. Of the total sockeye salmon captured, 1,899 fish were sampled for age, length, weight, or sex data. Age composition derived using previously described groupings of data revealed no difference in results for the major age classes tested (1.2, 1.3) by method (Table 21). Consequently, results from Method I were selected to represent the escapement age composition since variances calculated for proportions of major age classes were smaller than those calculated for Methods II and III. Age 1.2 sockeye salmon were the dominant age class in the escapement (55.1%), followed by age 1.3 (23.6%), and 2.2 (9.2%) fish (Table 22). Average length and weight data compiled by sex and age class, and ratio of males to females are presented in Appendix Tables 59 and 60.

Pink Salmon:

An estimated 101,300 pink salmon were enumerated in the Susitna River in 1983 (Table 23). The estimate consists of apportioned sonar counts from Yentna Station and the mark/recapture estimate generated at Sunshine Station (Appendix Table 46), and does not include mainstem or tributary spawners below river mile 77 (excluding Yentna River). Results of enumeration efforts at additional Susitna Hydroelectric sites are also presented in Appendix Table 46. Fish targets attributed to pink salmon at Susitna Station numbered 28,981 (Appendix Table 45).

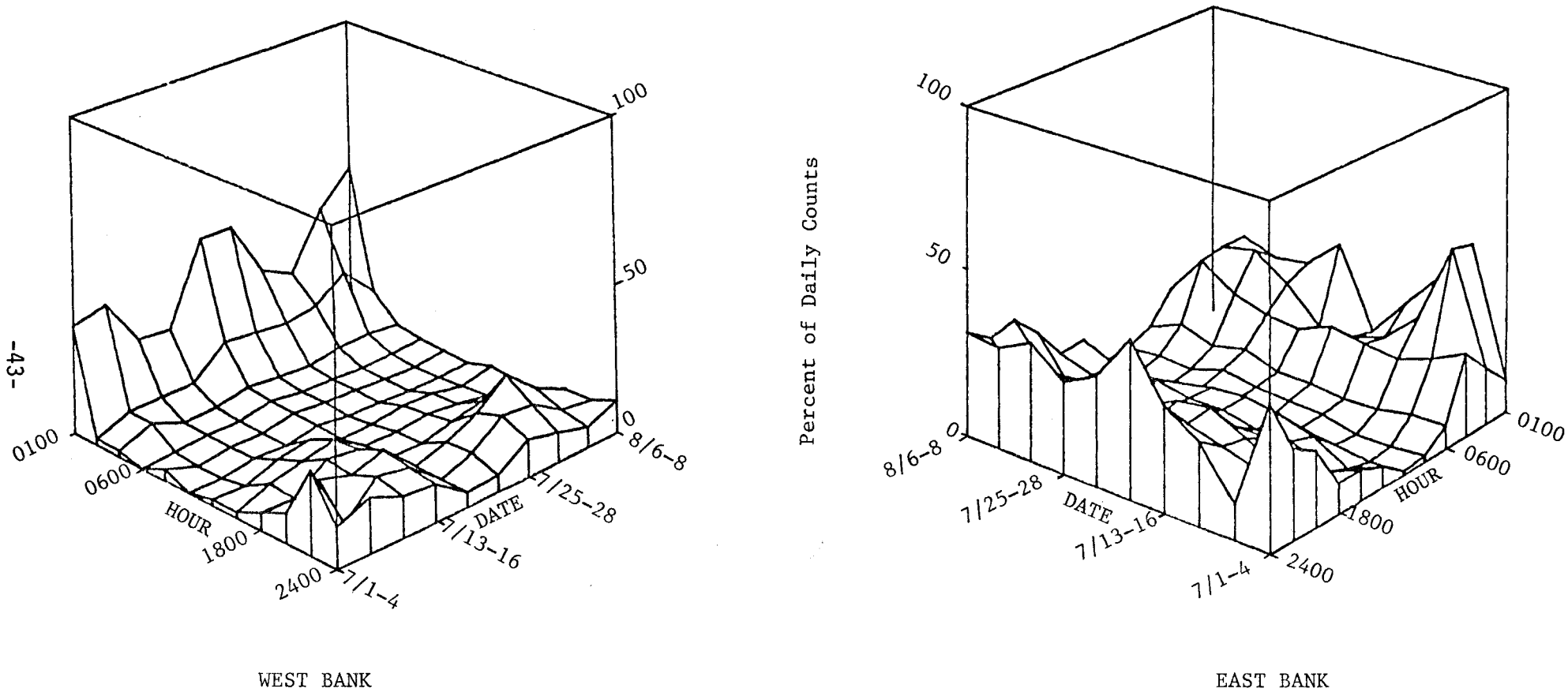

Figure 12. Susitna Station side-scan sonar count sector distribution over time (grouped in four-day time periods), 1 July - 8 August 1983. See Appendix Tables 47-50.

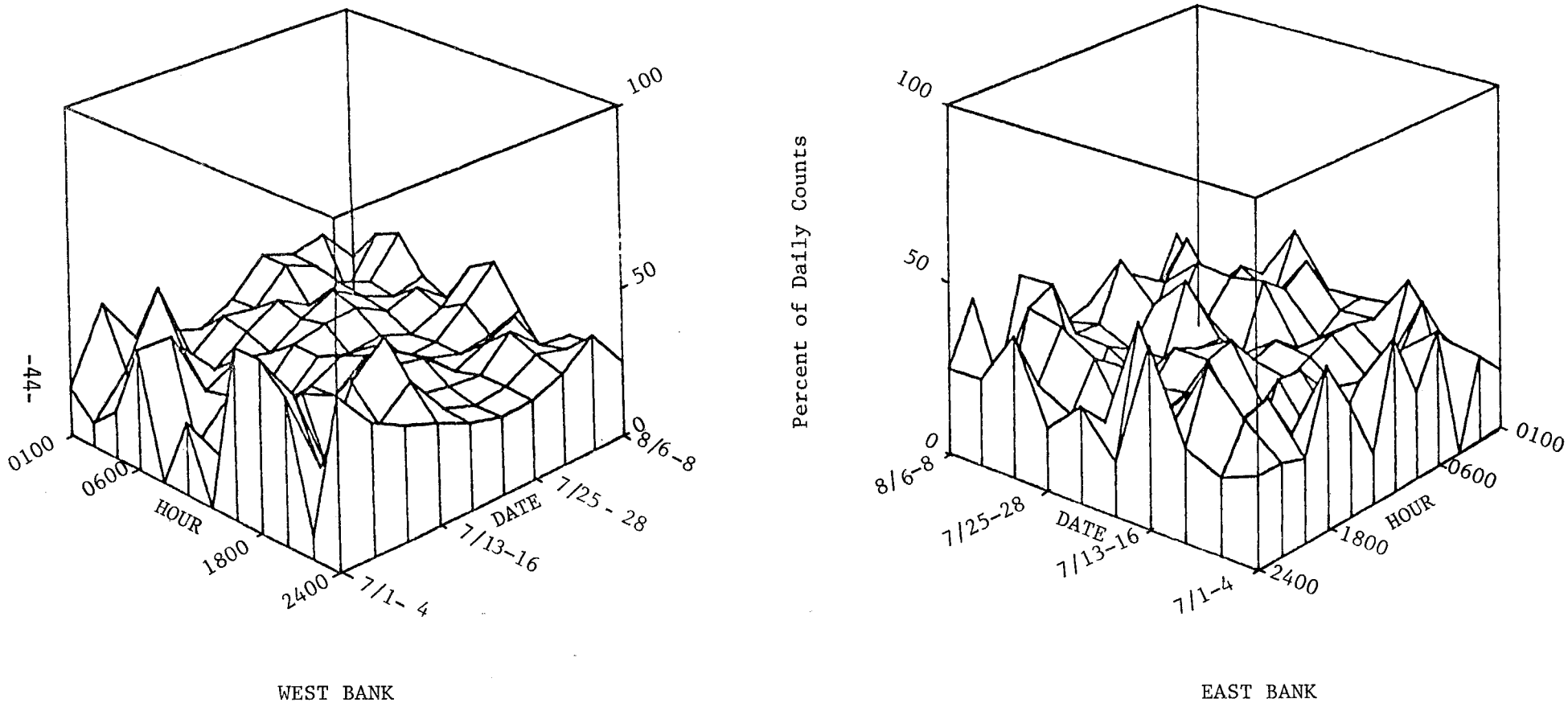

Figure 13. Susitna Station side-scan sonarcount hourly distribution over time (two-hour increments grouped in four-day time periods), 1 July - 8 August 1983. See Appendix Tables 51-54.

Table 20. Date of cumulative percent of sockeye salmon counts recorded at Susitna Station in the Susitna River, 1978-1982[1] [2].

Year	Date by 10% Interval									
	10%	20%	30%	40%	50%	60%	70%	80%	90%	100%[3]
1978	7/18	7/19	7/19	7/20	7/21	7/21	7/23	7/26	8/02	8/14
1979	7/20	7/21	7/21	7/22	7/22	7/22	7/24	7/26	7/28	8/30
1980	7/19	7/20	7/20	7/21	7/22	7/22	7/23	7/23	7/26	8/30
1981	7/11	7/14	7/15	7/16	7/17	7/19	7/21	7/23	7/27	8/22
1983	7/17	7/19	7/19	7/20	7/20	7/21	7/24	7/25	7/27	8/08

[1] Date on which percentage levels equaled or exceeded.

[2] 1982 run timing information unavailable due to mid-season data loss.

[3] 100% date denotes last day of operation.

Table 21. Comparison of three methods of determining age composition of sockeye salmon collected in the Susitna River at Susitna Station, 1983.

	Percent Composition by Age Class									
Method	0.2	1.1	0.3	1.2	2.1	1.3	2.2	1.4	2.3	2.4
I[1]	3.1	0.2	4.9	55.1	0.5	23.6	9.2	0.2	2.9	0.3
II[2]	2.6	0.3	4.5	56.0	0.6	23.7	9.6	0.2	2.4	0.3
III[3]	2.8		5.3	55.7	0.4	21.9	11.4	0.3	1.9	0.3

[1] Method I - All age composition samples lumped together; age composition not weighted to numbers in escapement.

[2] Method II - Combined, weighted age compositions from four periods using data from all dates within each period.

[3] Method III - Combined, weighted age composition from four periods using data from one or more, but not all, dates within each period.

Table 22. Age composition of sockeye salmon collected in the Susitna River at Susitna Station, 1975-1983.

Seasonal Summary	Percent Composition by Age Class										Sample Size
	0.2	1.1	0.3	1.2	2.1	1.3	2.2	1.4	2.3	2.4	
1975[1]				57.8	tr	38.4	2.8		tr		498
1976[1]				47.9		49.4	1.7		tr		1,046
1977[1]				22.0	tr	73.8	3.5		tr		1,450
1978		3.7		48.2	8.0	36.0	2.5		1.5		767
1979[2]		4.5		61.0	1.4	20.6	5.3		1.0		830
1980[2]				50.0		36.2	4.7		5.2		823
1981[2]				8.9		83.0	3.0		4.5		2,233
1982		2.3		23.5	0.5	59.6	3.3		10.7		1,032
1983	3.1	0.2	4.9	55.1	0.5	23.6	9.2	0.2	2.9	0.3	1,899

[1] Precocious males, age 3_2, were excluded from the analysis since a representative sample of this age class was not taken each year.

[2] Percentages weighted by total numbers in escapement.

Table 23. Side scan sonar fish targets apportioned to pink salmon, chum salmon, and coho salmon in the Susitna River at Susitna Station, 1978-1983.

Year	Estimated Number of Fish			
	Pink	Chum	Coho	Chinook[1]
1978	2,470,100	148,000	100,800	54,359
1979	124,670	49,076	36,966	44,880
1980	2,047,423	7,939	42,895	[2]
1981	113,349	46,461	33,468	[2]
1982	926,807[3]	458,272[4]	79,824[4]	36,328
1983	101,300[4]	276,800[4]	24,100[4]	61,131

[1] Sport Fish Division chinook salmon escapement counts conducted on the following systems: Alexander Creek, Deshka River, Lake Creek, Talachulitna River, Peters/Martin Creek, Cache Creek, Willow Creek, Deception Creek, Montana Creek, Moose Creek, Kashwitna River, Little Willow Creek, Sheep Creek, Goose Creek, Indian Creek, Portage Creek, Chunilna Creek, Prairie Creek, and Chulitna River. Taken from ADF&G Sport Fish Division, 1984 Northern Cook Inlet Chinook Salmon Sport Fishery report to the Board of Fisheries.

[2] Complete surveys precluded by high, turbid water conditions.

[3] Total of Yentna Station (Susitna Hydroelectric) and Susitna Station east bank sonar estimates.

[4] Total of Yentna Station (Susitna Hydroelectric) sonar estimate and Sunshine Station (Susitna Hydroelectric) mark-recapture estimate.

Spawning ground survey estimates accounted for 6,348 pink salmon in selected streams within the drainage (Table 19). Comprehensive surveys were conducted on tributaries and side sloughs of the Susitna River above Talkeetna (ADF&G 1984). Remaining counts were obtained in conjunction with surveys of sockeye salmon spawning grounds and do not reflect pink salmon peak spawning periods or major spawning grounds.

Peak daily pink salmon counts at Susitna Station varied by 9 days between banks, although the midpoints varied by one 4 days (Appendix Tables 55 and 56). The west bank sonar count midpoint date of 27 July was 1 day later than the midpoint generated from fishwheel data at Yentna Station (Table 5 and ADF&G 1984). Compared to previous years, 1983 run timing data support a trend of an approximate 1 week difference in run timing between even and odd years (Table 24 and Tarbox et al. 1981).

A total of 315 pink salmon was sampled for length, weight, and sex data at Susitna Station. Results are presented in Appendix Tables 61 and 62.

Chum Salmon:

A total escapement estimate of 276,800 chum salmon was made for the Susitna River (Table 23), composed of Yentna Station sonar counts and the Sunshine Station mark/recapture estimate (ADF&G 1984). This total does not include Susitna River mainstem or tributary spawners (excepting Yentna River) below Sunshine Station. In contrast, Susitna Station sonar counts for chum salmon totaled 7,602 fish (Appendix Table 45). The estimate of 276,800 chum salmon is the second largest ever recorded for the drainage. Escapement estimates from additional selected sites on the Susitna River above Talkeetna are presented in Appendix Table 46.

Spawning ground surveys accounted for 4,461 chum salmon within the Susitna River drainage (Table 19). As with pink salmon, comprehensive enumeration efforts on spawning grounds are limited to the Susitna River above Talkeetna.

Chum salmon fish targets at Susitna Station peaked and reached the midpoint on 19 and 20 July, respectively (Appendix Tables 55 and 56), however, Susitna Hydroelectric data (ADF&G 1984) suggest a bimodal entry curve with a second peak occurring in mid to late August in Yentna Station and Sunshine Station fishwheel catches. Suggested reasons for this apparent bimodal entry pattern include commercial fishery influence, timing differences between stocks, and variations in river discharge level which may have influenced migration patterns or altered fishwheel catch efficiency. Cessation of enumeration activities at Susitna Station in early August likely biased migrating timing data for this species in 1983. Results from 1979 through 1981 when counters were operated through the end of August indicated that 30% to 40% of the chum salmon passed Susitna Station during August. Shore orientation and hourly distribution data for chum salmon were essentially masked during peak count periods in July by more abundant species.

A total of 131 chum salmon was sampled for age, length, weight, and sex characteristics at Susitna Station. Proportion of samples by age class varied considerably from previous years with the percentage of 0.4 age fish (45%) nearly equal to that of age 0.3 fish (55%; Table 25). The absence of age 0.2 fish in Susitna Station data may be a function of sample size and distribution (approximately 75% of the

Table 24. Date of cumulative percent of pink salmon counts recorded in the Susitna River at Susitna Station, 1978-1983[1] [2] [3].

	Date by 10% Interval									
Year	10%	20%	30%	40%	50%	60%	70%	80%	90%	100%
1978	7/21	7/23	7/24	7/25	7/26	7/27	7/29	7/31	8/02	8/13
1979	7/15	7/19	7/20	7/22	7/23	7/24	7/26	7/27	7/29	8/29
1980	7/25	7/28	7/29	7/30	7/31	8/01	8/03	8/04	8/06	8/29
1981	7/16	7/21	7/23	7/24	7/25	7/26	7/28	7/29	8/02	9/02
1983	7/17	7/19	7/19	7/20	7/20	7/21	7/24	7/25	7/27	8/08

[1] Date on which percentage level equaled or exceeded.

[2] 100% date denotes last day of operation.

[3] 1982 run timing information unavailable due to mid-season data loss.

Table 25. Unweighted age composition of chum salmon collected in the Susitna River at Susitna Station, 1975-1983.

Year	Percent Composition by Age Class				Sample Size
	0.2	0.3	0.4	0.5	
1975	9.8	88.3	2.0	0	613
1976	17.2	68.1	14.6	0	267
1977	9.1	86.5	4.3	tr	927
1978	18.7	52.6	28.3	0.4	963
1979	5.1	90.5	4.3	0	391
1980	38.0	49.3	12.7	0	71
1981	1.9	90.9	7.1	0	154
1982	5.3	83.2	11.5	0	340
1983	0	55.0	45.0	0	131

samples were from east bank fishwheels), although this age class was also a very small proportion of Susitna Hydroelectric Station age compositions (Yentna Station 2.2%, Sunshine Station 0.3%, ADF&G 1984). The relative proportions of these three age classes in the 1983 escapement may reflect differences in magnitude of escapement indices reported for the 1978 through 1980 parent years. Length and weight characteristics by age class and sex, and the ratio of males to females are presented in Appendix Tables 63 and 64.

Coho Salmon:

Estimates of Susitna River coho salmon escapement ranged from 11,729 fish (Susitna Station sonar count; Appendix Table 45) to 24,100 fish (combined Yentna Station sonar count and Sunshine Station mark/recapture estimate; Table 23). The upper estimate does not include spawners returning to tributaries below river mile 77 exclusive of Yentna River. Spawning ground surveys enumerated only 399 coho salmon (Table 19) although extensive surveys were conducted only on the Susitna River and its tributaries above Talkeetna (ADF&G 1984). Mark/recapture estimates for coho salmon at additional points on the Susitna River above Sunshine Station are presented in Appendix Table 46.

Fifty percent of the fish targets attributed to coho salmon at Susitna Station passed the counters by 21 July, approximately 7 days earlier than the historic (1978-1981) average. In contrast, peak passage rates calculated from fishwheel catches at Yentna Station and Sunshine Station were 27 July and 5 August, respectively (ADF&G 1984). The apparent early migration timing of coho salmon at Susitna Station is likely a result of early termination of the project when normally 20% to 30% of the coho salmon escapement occurs in August. As with chum salmon, the relative abundance of other species migrating concurrent to coho salmon during peak periods effectively masked shore orientation and hourly distribution data for this species.

A total of 182 coho salmon was sampled for age, weight, length, and sex characteristics at Susitna Station. The dominant age class (67.2%) was age 2.1 fish (Table 26). Length and weight characteristics by age class and sex, and the ratio of males to females are presented in Appendix Tables 65 and 66.

Chinook Salmon:

Chinook salmon escapement estimates have not been undertaken at Susitna Station since 1978. Migratory behavior not conducive to enumeration by side-scan sonar and early run timing in comparison to other salmon species are the primary reasons for the lack of an enumeration program. The Petersen mark/recapture program conducted at Sunshine Station resulted in an estimate of 87,291 fish (ADF&G 1984). Stream survey information compiled to date identified 62, 173 chinook salmon in selected tributaries (primarily below Sunshine Station) in the Susitna River drainage (Table 19). Petersen mark/recapture estimates were also obtained for Talkeetna and Curry Stations on the Upper Susitna River (Appendix Table 46).

Migratory timing and AWL (age, weight, length) information for Susitna Hydroelectric project sites are found in ADF&G (1984). Index area counts obtained by Sport Fish Division in selected tributaries for the years 1976 through 1983 are presented in ADF&G Sport Fish Division (1984). Year to year comparisons are made which indicate escapement into the Susitna River was high in 1983 relative to the previous 7 years.

Table 26. Unweighted age composition of coho salmon collected in the Susitna River, 1975-1983.

Year	Percent Composition by Age Class						Sample Size
	1.1	2.0	2.1	3.0	2.2	3.1	
1975	24.4	0	75.6	0	0	0	406
1976	4.5	0	93.5	0	0.2	1.7	418
1977	8.5	0	90.8	0	0.1	0.6	1,112
1978	28.2	0	71.7	0	0	0.1	773
1979	21.5	3.0	74.1	1.0	0	0.3	297
1980	17.6	2.7	72.9	0	0	6.9	336
1981	13.1	tr	81.4	0	0	5.0	221
1982	22.0	0	74.4	0	0	3.6	305
1983	26.7	0	67.2	0	0	6.1	182

Evaluation of Data:

Data from various studies conducted on the Susitna River indicate that in general chum salmon, coho salmon, and chinook salmon do not exhibit strong inshore orientation in the lower Susitna and Yentna Rivers. Therefore, only that component of the escapement migrating within 20 m of the shore at the respective sonar sites will be included in the total fish target counts.

Additionally, various siting criteria (King 1984) must be met to insure that even normally shore oriented species (sockeye salmon and pink salmon) move through the hydroacoustic beam during migration. Failure to meet these criteria will result in undercounting, with the degree of undercounting dependent on a variety of factors.

Differences in migratory behavior between species further results in problems in apportioning total fish targets based on fishwheel catches. That is, fish that cross the substrate in the outer sectors may not be subject to fishwheel capture, resulting in apportioned fish targets being biased toward those species which exhibit the strongest inshore preference. The degree to which these factors affect the accuracy of apportioned fish targets by species is dependent yearly on total count distribution and run strength of each species relative to the others.

Assessment of escapement estimates should also include some evaluation of factors affecting accuracy of mark/recapture estimates. Several assumptions must be met in any mark/recapture estimate (Jones 1977, Ricker 1958, Jones 1976). The effects of violating these assumptions can be to over or underestimate the population size although in general most errors result in overestimation. In the absence of adequate studies to measure sources of error which result in assumption violations, the potential error in a population estimate cannot be quantified. However, numerous studies have been done which compare mark/recapture estimates to total counts obtained from other methods (generally weir counts). It is apparent from this literature that mark/recapture estimates vary widely from actual escapement, and are nearly always an overestimation (Brett 1952, Lister et al. 1931, Simpson 1984).

Finally, using reported escapements as estimates of total spawners in the Susitna River is complicated by the fact that it is not known what proportion of each species escapement spawns between and below established enumeration sites.

It is apparent, after review of the numerous factors which affect accuracy of counting in the Susitna River, that very little evidence can be presented which establishes the accuracy of reported escapement estimates relative to actual escapement.

Upper Cook Inlet Minor Systems

Escapement estimates for various Upper Cook Inlet rivers (Figure 14) not regularly monitored by Commercial Fisheries Division staff are summarized in Table 27. Additional detail is provided for systems where an effort was made to quantify total escapement, or where index areas have been established to provide relative year to year comparative data.

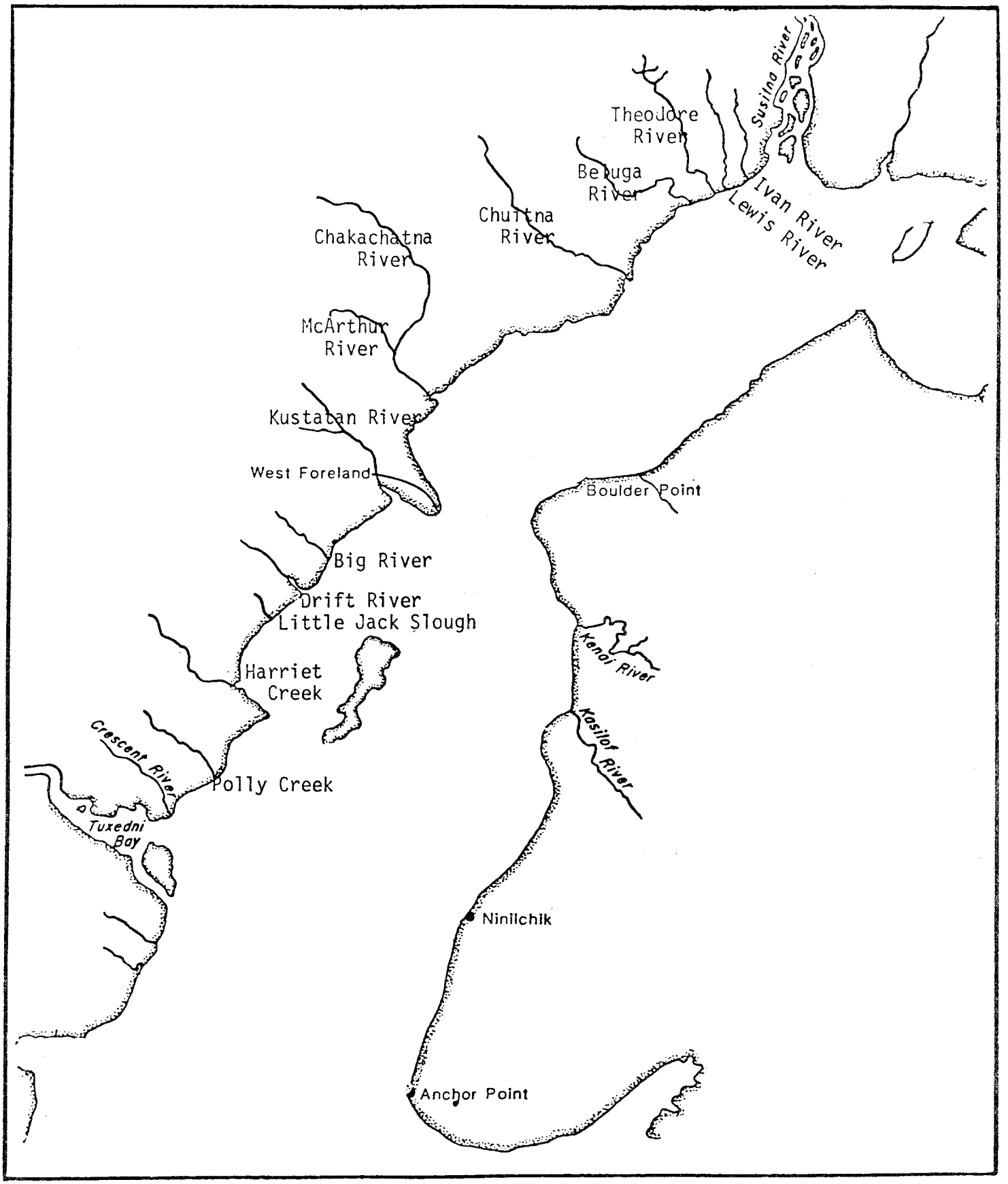

Figure 14. Upper Cook Inlet west side streams.

Table 27. Salmon escapement observations in selected Upper Cook Inlet anadromous streams, 1983[1].

Stream	Method	Number of Fish Observed or Estimated				
		Sockeye	Pink	Chum	Coho	Chinook
Fitz Creek[2]	Aerial Count			850		
Clearwater Creek[2]	Aerial Count			10,900	200	
Chinitna River[2]	Aerial Count			350		
Polly Creek[2]	Aerial Count			1,000	400	
Harriet Creek[2]	Aerial Count				575	
Little Jack Slough[3 4]	Aerial Count	400			5,500	
Cannery Creek[3]	Aerial Count		30		252	
Drift River[3]	Aerial Count		70		822	
Big River[3]	Weir	32,950				
	Aerial Count	120,000				
Chakachatna River - McArthur River[2]	Aerial Count	17,824		11		
Chuitna River[6]			7,150		1,600-1,800	5,750-6,500
Threemile Creek[3]	Aerial Count					250
Olson Creek[3]	Aerial Count					30
Pretty Creek[3]	Aerial Count					6
Drill Creek[3]	Aerial Count					1,000
Bishop Creek	Aerial Count					7
Coal Creek[2 7]	Aerial Count	2,450				
Theodore River[8]	Aerial Count					1,519
Lewis River[3]	Aerial Count					521
Little Susitna River[9]	Ground Count				2,666	
Nancy Lake[2]	Aerial Count	4,800				
Fish Creek[10]	Weir Count	118,797			2,342	
Chickaloon River[3]	Aerial Count	1,000				4
Thurman Creek[3]	Aerial Count	50				2
Mystery Creek[3]	Aerial Count	2,000				
Bishop Creek[3]	Aerial Count	4,500				
Crooked Creek	Weir Count	2,183			1,141	4,305
Ninilchik River	Aerial Count					710
Deep Creek	Aerial Count					1,010
Anchor River	Aerial Count					1,490
Packers Lake	Weir Count	18,403				

1 Aerial and ground counts are not considered to be total escapement counts unless indicated.
2 ADF&G Commercial Fisheries Division surveys.
3 Cook Inlet Aquaculture Association surveys (Marcuson, pers. comm.).
4 Includes Blue (Elling) Lake.
5 Weir counts from Wolverine Lake only (Cook Inlet Aquaculture Association 1983).
6 Environmental Research and Technology (1984).
7 Counts from West Fork Coal Creek only.
8 ADF&G Sport Fish Division (1984).
9 Engel (1984).
10 Chlupach, pers. comm.

Big River:

Cook Inlet Aquaculture Association operated two fishwheels in Big River (7 to 8 mi upstream from Cook Inlet) and a weir on Wolverine Creek (outlet of Wolverine Lake). Aerial surveys were conducted in additional known clearwater spawning areas. A total of 32,950 sockeye salmon was enumerated through the weir on Wolverine Creek and an estimated 120,000 sockeye salmon were counted in aerial surveys. Additional escapement estimates were generated via mark/recapture techniques and are presented in Marcuson (1984).

Chuitna River:

Salmon escapement into the Chuitna River was estimated by aerial counts as part of an environmental baseline study for the Diamond Shamrock-Chuitna Coal Joint Venture Project. Reported counts for the drainage were 5,750-6,500 chinook salmon, 1,600-1,800 coho salmon, and 7,150 pink salmon. Specific tribtuary information can be found in Environmental Research and Technology, Inc. (1984).

Upper Cook Inlet Westside Streams:

Aerial surveys are conducted annually on selected index streams to enumerate chinook salmon. Counts from 1983 and previous years are presented in ADF&G Sport Fish Division (1984). Streams and corresponding chinook salmon counts were as follows:

Chuitna River	-	5,750-6,500
Bishop Creek	-	1,000
Theodore River	-	1,519
Lewis River	-	521

Fish Creek (Big Lake):

Salmon enumeration was accomplished primarily through a weir operated below Big Lake. Final escapement estimates were 118,797 sockeye salmon and 2,342 coho salmon (Chlupach, pers. comm.). Historic escapement and migratory timing information for sockeye salmon spawning in this drainage is presented in Tables 28 and 29.

South Kenai Peninsula Streams:

Aerial surveys are conducted annually on the Anchor River, Deep Creek, and Ninilchik River by Sport Fish Division staff. Reported chinook salmon escapements in 1983 were 1,490, 1,010, and 710 fish, respectively (Hammarstrom 1984).

Packers Creek (Kalgin Island):

A total of 18,403 sockeye salmon was counted through a weir established below the outlet of Packers Lake (Marcuson 1984).

Table 28. Fish Creek sockeye salmon escapement, Big Lake drainage, 1936-1983.

Year	Dates	Methods	Total Number of Sockeye Salmon
1936	7/15-8/11	Weir	203,039
1937	7/21-8/09	Weir	50,617
1938	7/10-8/08	Weir	182,463
1939	7/11-8/12	Weir	116,588
1940	7/04-8/12	Weir	306,982
1941	7/04-8/09	Weir	55,077
1942-1945	No actual counts conducted		
1946		Est. ground count	57,000
1947		Est. ground count	150,000
1948		Est. ground count	150,000
1949	7/09-8/17	Weir	68,240
1950	7/09-8/17	Weir	29,659
1951	7/04-8/16	Weir	34,704
1952	7/12-8/09	Weir	92,724
1953	7/11-8/05	Weir	54,343
1954	7/13-8/09	Weir	20,904
1955	7/08-8/08	Weir	32,724
1956	7/08-7/31	Weir	32,663
1957	7/12-8/25	Weir	15,630
1958	7/04-7/28	Weir	17,573
1959	7/10-8/02	Counting Screen	77,416
1960	7/04-7/31	Counting Screen	80,000
1961	7/04-7/31	Counting Screen	40,000
1962	7/04-7/31	Counting Screen	60,000
1963	7/04-8/01	Counting Screen	119,024
1964	7/04-7/31	Counting Screen	65,000
1965	7/04/8/08	Counting Screen	16,544
1966	7/05-7/31	Counting Screen	41,312
1967	7/03-7/31	Counting Screen	22,624
1968	7/01-7/31	Counting Screen	19,616
1969	7/04-9/02	Weir	12,456
1970	7/04-8/08	Weir	25,000
1971	7/03-8/07	Weir	32,000
1972	7/02-9/08	Weir	6,981
1973	7/01-9/06	Weir	2,705
1974	7/07-9/06	Weir	16,225
1975	7/03-9/11	Weir	29,882
1976	7/05-9/10	Weir	14,032
1977	7/05-8/15	Weir	5,292
1978		Weir	3,555
1979	7/09-8/25	Weir	68,739
1980	7/04-8/27	Weir	62,628
1981	7/09-9/03	Weir	50,479
1982	7/12-9/08	Weir	28,164
1983	7/05-8/30	Weir	118,797

Table 29. Date of cumulative percent of sockeye salmon counts recorded in Fish Creek, 1978-1983[1] [2].

Year	Starting Date	Date of 10% Interval									
		10%	20%	30%	40%	50%	60%	70%	80%	90%	100%
1980	7/04	7/19	7/21	7/22	7/23	7/23	7/24	7/25	7/25	7/28	8/27
1981	7/09	7/12	7/14	7/15	7/15	7/16	7/18	7/19	7/22	7/27	8/23
1982	7/12	7/21	7/22	7/23	7/24	7/25	7/27	7/28	7/30	8/08	9/08
1983	7/11	7/21	7/22	7/23	7/24	7/25	7/26	7/28	7/31	8/04	

[1] Date on which percentage level equaled or exceeded.

[2] 100% date denotes last day of operation.

LITERATURE CITED

Alaska Department of Fish and Game. 1983. Susitna Hydro Aquatic Studies Phase II Report. Alaska Department of Fish and Game Susitna Hydro Aquatic Studies. 125 pp.

Alaska Department of Fish and Game Sport Fish Division. 1984. Northern Cook Inlet chinook salmon sport fishery Report to the Board of Fisheries, March 1984.

Barrett, B.M., F.M. Thompson, and S.N. Wick. 1984. Adult anadromous fish investigations: May-October 1983. Alaska Department of Fish and Game Susitna Hydro Aquatic Studies. Report No. 1. 225 pp.

Bernard, D.R. 1983. Statewide standards for sampling fish populations for age composition. Alaska Department of Fish and Game Attachment No. 8 (mimeo). 4 pp.

Bethe, M.L., P.V. Krasnowski, and S.L. Marshall. 1980. Origins of sockeye salmon in the Upper Cook Inlet fishery of 1978 based on scale pattern analysis. Alaska Department of Fish and Game. Informational Leaflet No. 186. 45 pp.

Brett, J.R. 1952. Skeena River sockeye escapement and distribution, Journal Fisheries Research Board of Canada 8(7):453-468.

Chlupach, R. Personal communication. Alaska Department of Fish and Game. Fisheries Rehabilitation, Enhancement, and Development Division. Palmer, Alaska.

Cook Inlet Aquaculture Association. 1983. Packers Lake report. (Mimeo).

Cross, B.A., D.R. Bernard, and S.L. Marshall. 1983. Recruits-per-spawner ratios for sockeye salmon of Upper Cook Inlet, Alaska. Alaska Department of Fish and Game Informational Leaflet No. 221. 82 pp.

Delaney, K. and K. Hepler. 1984. Inventory and cataloging of sport fish and sport fish waters of Western Prince William Sound, Lower Susitna River, northern Cook Inlet drainages. (Mimeo).

Engel, L. 1984. Northern Cook Inlet coho fishery. Report to the Alaska Board of Fisheries.

Environmental Research and Technology. 1984. Diamond Chuitna Project aquatic biology baseline studies report, for Diamond Shamrock-Chuitna Coal Joint Venture.

Flagg, L.B. 1983. Central Cook Inlet F.R.E.D. Division 1983 Annual Report. Alaska Department of Fish and Game. (Mimeo). 46 pp.

Hammarstrom, S. Personal communication. Alaska Department of Fish and Game. Sport Fish Division. Soldotna, Alaska.

Jones, R. 1976. The use of marking data in fish population analysis. FAO Fisheries Technical Paper No. 153. 42 pp.

Jones, R. 1977. Tagging: Theoretical methods and practical difficulties. In: Gulland, J.A. (ed.) 1977. Fish population dynamics. John Wiley and Sons Publ.

King, B.E. 1984. Site characteristics for Bendix side scan sonar deployment in Upper Cook Inlet, Alaska. Canadian Technical Report of Fisheries and Aquatic Sciences. (In press).

King, B.E. and K.E. Tarbox. 1983. Upper Cook Inlet *(Oncorhynchus* spp.*)* escapement studies, 1982. Alaska Department of Fish and Game Technical Data Report No. 93. 139 pp.

Lister, D.B., L.M. Thorson, and I. Wallace. 1981. Chinook and coho salmon escapements and coded-wire tag returns to the Cowichan-Koksilah River system 1976-1979. Canadian Manuscript Report of Fisheries and Aquatic Sciences No. 1608. 78 pp.

Marcuson, P. 1984. Big River Lakes pre-enhancement investigation, 1983 field season. Cook Inlet Aquaculture Association Technical Report. 27 pp.

Marcuson, P. Personal communication. Cook Inlet Aquaculture Association. Soldotna, Alaska.

Namtvedt, T.B., N.V. Friese, and D.L. Waltemyer. 1979. Cook Inlet sockeye salmon studies. Alaska Department of Fish and Game. Technical Report for period July 1, 1977 to June 30, 1978. 94 pp.

Nelson, D.C. 1984. Russian River sockeye salmon study. Alaska Department of Fish and Game. Anadromous Fish Studies, Annual Report of Progress, 1983-1984. Project AFS 44, 24 (AFS-44-10). 50 pp.

Och, R. Personal communication. Alaska Department of Fish and Game. Fisheries Rehabilitation, Enhancement, and Development Division. Kasilof, Alaska.

Ricker, W.E. 1958. Handbook of computations for biological statistics of fish populations. Bulletin Fisheries Research Board of Canada. No. 119. 300 pp.

Roberson, K., M.F. Merritt, and P.J. Fridgen. 1982. Copper River-Prince William Sound sockeye salmon catalog and inventory. Alaska Department of Fish and Game. Completion report for period July 1, 1977 to June 30, 1981. 48 pp.

Simpson, K. 1984. Untitled. Canadian Technical Report of Fisheries and Aquatic Sciences. (In press).

LITERATURE CITED (Continued)

Tarbox, K.E., B.E. King, and D. Waltemyer. 1981. Kenai, Kasilof, and Crescent River sonar investigations. Alaska Department of Fish and Game Legislative Report. 37 pp.

Tarbox, K.E., B.E. King, and D.L. Waltemyer. 1983. Cook Inlet sockeye salmon studies. Alaska Department of Fish and Game. Completion report for period July 1, 1977 to June 30, 1982.

Waite, D. Personal communication. Alaska Department of Fish and Game. Fisheries Rehabilitation, Enhancement, and Development Division. Soldotna, Alaska.

Waltemyer, D.L., T.B. Namtvedt, and B.E. King. 1980. Cook Inlet sockeye salmon studies. Alaska Department of Fish and Game. Technical Report for the period July 1, 1978 to June 30, 1979. 58 pp.

APPENDICES

Appendix Table 1. Total number of fish targets and estimated species composition recorded by side-scan sonar in the Kenai River, 22 June through 12 August 1983*.

Date No Day	Fish Targets	Accum	Number of Fish					
			Sockeye	Accum	Coho	Accum	King	Accum
6/22	436	436	434	434	2	2	0	0
6/23	472	908	470	904	2	4	0	0
6/24	445	1353	443	1347	2	6	0	0
6/25	605	1958	602	1949	3	9	0	0
6/26	424	2382	422	2371	2	11	0	0
6/27	596	2978	593	2964	3	14	0	0
6/28	598	3576	595	3559	3	17	0	0
6/29	411	3987	409	3968	2	19	0	0
6/30	420	4407	419	4387	1	20	0	0
7/ 1	316	4723	315	4702	1	21	0	0
7/ 2	230	4953	229	4931	1	22	0	0
7/ 3	281	5234	280	5211	1	23	0	0
7/ 4	229	5463	228	5439	1	24	0	0
7/ 5	215	5678	214	5653	1	25	0	0
7/ 6	299	5977	298	5951	1	26	0	0
7/ 7	211	6188	210	6161	1	27	0	0
7/ 8	216	6404	215	6376	1	28	0	0
7/ 9	367	6771	366	6742	1	29	0	0
7/10	1338	8109	1335	8077	3	32	0	0
7/11	2472	10581	2463	10540	9	41	0	0
7/12	2994	13575	2983	13523	11	52	0	0
7/13	12585	26160	12538	26061	47	99	0	0
7/14	27677	53837	27586	53647	91	190	0	0
7/15	56290	110127	56160	109807	130	320	0	0
7/16	42674	152801	42674	152481	0	320	0	0
7/17	34916	187717	34916	187397	0	320	0	0
7/18	88218	275935	88155	275552	63	383	0	0
7/19	80952	356887	80952	356504	0	383	0	0
7/20	81497	438384	81497	438001	0	383	0	0
7/21	44845	483229	44845	482846	0	383	0	0
7/22	18914	502143	18914	501760	0	383	0	0
7/23	10889	513032	10660	512420	184	567	46	46
7/24	12828	525860	12506	524926	258	825	64	110

-Continued-

Appendix Table 1. Total number of fish targets and estimated species composition recorded by side scan sonar in the Kenai River, 22 June through 8 August 1983* [continued].

Date Mo Day	Fish Targets	Accum	Number of fish Sockeye	Accum	Coho	Accum	King	Accum
7/25	7457	533317	7344	532270	90	915	23	133
7/26	10648	543965	10459	542729	151	1066	38	171
7/27	2406	546371	2381	545110	20	1086	5	176
7/28	4502	550873	4424	549534	62	1148	16	192
7/29	3978	554851	3925	553459	42	1190	11	203
7/30	2406	557257	2372	555831	27	1217	7	210
7/31	5823	563080	5751	561582	57	1274	14	224
8/ 1	9802	572882	9703	571285	79	1353	20	244
8/ 2	6381	579263	6288	577573	74	1427	19	263
8/ 3	2142	581405	2113	579686	23	1450	6	269
8/ 4	9390	590795	9319	589005	57	1507	14	283
8/ 5	19059	609854	18771	607776	230	1737	58	341
8/ 6	8266	618120	8156	615932	88	1825	22	363
8/ 7	3714	621834	3672	619604	34	1859	9	372
8/ 8	4005	625839	3966	623570	31	1890	8	380
8/ 9	2404	628243	2368	625938	29	1919	7	387
8/10	2024	630267	1781	627719	236	2155	7	394
8/11	1929	632196	1721	629440	202	2357	6	400
8/12	975	633171	900	630340	73	2430	2	402
Total	633171		630340		2430		402	

* Sonar counts apportioned by fish wheel counts.
Round-off error estimated(worst case) +/- 1 fish per day.

Appendix Table 2. Kenai River north bank side-scan sonar counts by sector, 22 June through 12 August 1983.

DATE	SECTOR 1	2	3	4	5	6	7	8	9	10	11	12	TOTAL
6 22	2	2	1	0	0	0	1	6	25	49	69	104	259
6 23	14	0	0	1	1	2	4	26	31	96	53	72	300
6 24	15	5	6	3	2	4	7	14	26	65	80	73	300
6 25	5	6	0	0	1	1	7	10	35	65	108	113	351
6 26	4	4	0	0	2	0	7	14	15	58	62	85	251
6 27	12	3	6	1	2	0	4	9	19	101	136	123	416
6 28	19	7	2	4	1	2	10	30	34	87	129	63	388
6 29	11	5	0	1	3	2	8	18	28	54	91	78	299
6 30	22	8	8	5	2	0	4	39	52	58	57	71	326
7 1	21	4	2	1	5	3	4	6	25	40	34	50	195
7 2	18	12	10	1	0	1	0	4	11	16	21	21	115
7 3	15	6	7	1	0	3	6	8	21	39	25	29	160
7 4	7	10	5	1	2	0	3	17	17	24	24	33	143
7 5	17	3	4	7	2	0	1	13	21	31	18	22	139
7 6	23	12	9	2	2	1	0	6	14	15	11	30	125
7 7	0	0	0	0	0	0	0	3	19	29	20	24	95
7 8	5	0	0	0	0	0	0	7	19	12	7	18	68
7 9	1	0	0	0	0	0	0	0	2	5	5	3	16
7 10	59	31	36	27	24	24	31	53	91	135	143	97	751
7 11	46	23	18	8	5	7	31	86	204	363	292	293	1376
7 12	58	48	15	8	7	6	33	93	274	301	382	333	1558
7 13	159	152	135	23	18	16	72	298	665	951	1050	1040	4579
7 14	495	767	413	93	63	35	124	405	714	1197	2214	2437	8957
7 15	699	1049	678	123	74	48	181	726	1143	1811	3339	2879	12750
7 16	351	349	249	42	34	26	176	838	1606	1890	4366	4282	14209
7 17	184	530	434	106	39	32	129	519	1220	1774	2668	5327	12962
7 18	501	1603	1235	272	104	64	175	714	1934	3023	4406	6182	20213
7 19	1748	4350	2737	521	196	64	159	478	1369	2592	3140	3792	21146

-Continued-

Appendix Table 2. Kenai River north bank side-scan sonar counts by sector, 22 June through 12 August 1983 [continued].

	SECTOR												
DATE	1	2	3	4	5	6	7	8	9	10	11	12	TOTAL
7 20	224	1419	1644	350	142	35	131	574	2003	3947	6376	9762	26607
7 21	1016	3280	1627	287	98	26	108	710	1930	3742	2875	2052	17751
7 22	107	235	193	77	55	43	457	701	1321	2661	3274	2267	11391
7 23	198	88	117	58	41	19	153	344	802	2085	2070	1053	7028
7 24	102	67	160	65	45	11	73	347	1220	3807	2924	1271	10092
7 25	104	227	266	69	46	12	39	162	201	954	742	475	3297
7 26	94	83	72	18	27	25	39	180	465	2306	2172	1175	6656
7 27	57	9	5	4	4	2	8	27	39	380	495	494	1524
7 28	154	13	21	17	9	3	7	37	63	544	828	1049	2745
7 29	44	118	212	35	9	5	8	33	78	266	518	543	1869
7 30	163	17	28	7	3	1	3	14	22	180	342	426	1206
7 31	80	39	75	28	7	1	5	36	52	442	748	1015	2528
8 1	49	78	147	30	22	10	8	56	117	609	978	1257	3361
8 2	31	200	274	29	7	8	9	20	70	492	614	826	2580
8 3	65	51	50	9	2	3	1	2	10	121	142	309	765
8 4	439	919	693	415	244	164	56	36	37	50	53	84	3190
8 5	3103	4276	1490	406	131	30	55	46	60	144	134	257	10132
8 6	2511	1512	457	78	22	11	21	24	17	90	62	90	4895
8 7	411	597	188	26	4	0	8	15	15	49	64	119	1496
8 8	390	530	210	32	2	1	4	10	31	52	35	76	1373
8 9	724	495	100	16	2	1	2	3	8	25	32	93	1501
8 10	531	375	86	8	2	1	0	7	9	32	46	135	1232
8 11	581	221	44	5	2	0	6	11	11	27	61	117	1086
8 12	97	74	19	0	2	0	2	6	2	8	21	155	386
TOTAL	15786	23912	14188	3320	1517	753	2380	7841	18217	37894	48556	52774	227138*

* Total count may differ from total fish targets by bank because of method used to average for debris.

Appendix Table 3. Kenai River north bank side-scan sonar counts by sector, three day time periods, 22 June through 12 August 1983.

DATE	SECTOR 1	2	3	4	5	6	7	8	9	10	11	12	TOTAL	CUMULATIVE TOTAL
6 22-24	31	7	7	4	3	6	12	46	82	210	202	249	859	859
6 25-27	21	13	6	1	5	1	18	33	69	224	306	321	1018	1877
6 28-30	52	20	10	10	6	4	22	87	114	199	277	212	1013	2890
7 1- 3	54	22	19	3	5	7	10	18	57	95	80	100	470	3360
7 4- 6	47	25	18	10	6	1	4	36	52	70	53	85	407	3767
7 7- 9	6	0	0	0	0	0	0	10	40	46	32	45	179	3946
7 10-12	163	102	69	43	36	37	95	232	569	799	817	723	3685	7631
7 13-15	1353	1968	1226	239	155	99	377	1429	2522	3959	6603	6356	26286	33917
7 16-18	1036	2482	1918	420	177	122	480	2071	4760	6687	11440	15791	47384	81301
7 19-21	2988	9049	6008	1158	436	125	398	1762	5302	10281	12391	15606	65504	146805
7 22-24	407	390	470	200	141	73	683	1392	3343	8553	8268	4591	28511	175316
7 25-27	255	319	343	91	77	39	86	369	705	3640	3409	2144	11477	186793
7 28-30	361	148	261	59	21	9	18	84	163	990	1688	2018	5820	192613
7 31- 2	160	317	496	87	36	19	22	112	239	1543	2340	3098	8469	201082
8 3- 5	3607	5246	2233	830	377	197	112	84	107	315	329	650	14087	215169
8 6- 8	3312	2639	855	136	28	12	33	49	63	191	161	285	7764	222933
8 9-11	1836	1091	230	29	6	2	8	21	28	84	139	345	3819	226752
8 12-12	97	74	19	0	2	0	2	6	2	8	21	155	386	227138*
TOTAL	15786	23912	14188	3320	1517	753	2380	7841	18217	37894	48556	52774	227138*	

* Total count may differ from total fish targets by bank because of method used to average for debris.

Appendix Table 4. Kenai River south bank side-scan sonar counts by sector, 22 June through 12 August 1983.

DATE	SECTOR 1	2	3	4	5	6	7	8	9	10	11	12	TOTAL
6 22	1	0	0	0	0	0	10	11	14	23	25	74	158
6 23	4	9	1	0	0	0	0	6	8	17	25	98	168
6 24	5	2	6	0	0	0	1	0	7	18	42	68	149
6 25	1	6	1	0	0	0	0	0	8	33	58	141	248
6 26	4	3	2	0	0	0	0	2	6	12	72	73	174
6 27	1	4	0	0	0	0	0	0	6	15	69	84	179
6 28	16	10	0	0	0	0	0	0	16	24	60	77	203
6 29	14	8	1	0	0	0	0	2	3	21	36	40	125
6 30	21	16	1	0	0	0	1	0	3	30	4	19	95
7 1	18	9	2	0	0	0	0	3	10	25	26	34	127
7 2	2	2	2	0	0	0	1	2	9	23	5	17	63
7 3	5	5	3	0	0	0	0	5	12	33	21	40	124
7 4	1	5	4	0	0	0	1	4	14	18	19	27	93
7 5	2	7	3	0	0	0	2	2	9	19	20	15	79
7 6	13	12	2	0	0	0	0	7	22	38	49	32	175
7 7	14	24	1	0	0	0	1	2	14	21	25	24	126
7 8	12	14	5	0	0	0	3	7	20	33	30	21	145
7 9	25	38	21	3	0	0	2	0	3	18	40	56	206
7 10	115	285	227	43	1	0	4	2	12	29	78	81	877
7 11	138	371	194	37	0	0	7	9	7	49	110	229	1151
7 12	99	553	393	32	2	0	7	10	20	65	104	151	1436
7 13	335	2418	2609	115	3	1	12	12	23	91	150	225	5994
7 14	492	6820	6711	276	1	1	4	8	19	62	178	212	14784
7 15	1916	18627	17765	1033	12	1	9	20	20	51	164	289	39907
7 16	1202	8357	11477	711	9	0	7	15	32	142	127	142	22221
7 17	2195	6715	6876	594	7	1	7	18	20	64	80	162	16739
7 18	12592	31956	17936	708	11	1	8	11	25	83	102	173	63606

-Continued-

Appendix Table 4. Kenai River south bank side-scan sonar counts by sector, 22 June through 12 August 1983 [continued].

	SECTOR												
DATE	1	2	3	4	5	6	7	8	9	10	11	12	TOTAL
7 19	6970	23915	22060	1246	22	2	13	19	58	174	270	415	55164
7 20	5751	23781	17278	1018	31	9	22	48	112	266	528	1683	50527
7 21	1226	9369	11172	660	4	1	9	27	275	151	264	651	23809
7 22	93	2361	2136	177	4	0	7	6	31	107	222	364	5508
7 23	47	1080	897	76	0	0	5	8	33	80	210	378	2814
7 24	33	269	562	97	3	0	8	17	42	103	109	250	1493
7 25	148	1280	1691	100	5	0	4	12	27	28	61	129	3485
7 26	336	1364	1244	122	4	0	7	144	48	73	165	475	3982
7 27	19	149	198	28	1	1	8	45	33	63	209	137	891
7 28	50	335	629	71	3	1	12	11	44	109	218	274	1757
7 29	51	611	603	40	6	1	5	22	55	108	282	325	2109
7 30	47	243	262	25	1	1	4	23	38	86	202	268	1200
7 31	48	438	1229	120	3	0	4	4	48	153	548	700	3295
8 1	68	1581	3932	307	5	0	5	7	28	56	148	188	6325
8 2	120	1089	1440	80	3	0	4	8	30	43	117	181	3115
8 3	58	379	416	25	6	6	7	5	19	19	88	95	1123
8 4	1889	1885	2771	502	363	361	30	29	30	62	83	114	8119
8 5	3200	3099	2369	69	2	3	23	31	40	114	156	256	9362
8 6	1050	1439	1172	60	4	0	19	38	116	125	151	227	4401
8 7	489	598	409	17	1	1	3	8	30	55	152	456	2219
8 8	828	739	319	17	2	1	17	40	44	102	174	348	2631
8 9	203	183	91	8	1	0	9	18	31	62	107	399	1112
8 10	54	66	44	0	1	0	2	6	16	54	87	434	764
8 11	142	91	51	2	2	0	8	25	27	58	126	319	851
8 12	76	27	17	2	1	4	17	31	45	57	95	214	586
TOTAL	42239	152647	137235	8421	524	397	339	790	1662	3365	6491	11884	365994*

* Total count may differ from total fish targets by bank because of method used to average for debris.

Appendix Table 5. Kenai River south bank side-scan sonar counts by sector, three day time periods, 22 June through 12 August 1983.

DATE	SECTOR 1	2	3	4	5	6	7	8	9	10	11	12	TOTAL	CUMULATIVE TOTAL
6 22-24	10	11	7	0	0	0	11	17	29	58	92	240	475	475
6 25-27	6	13	3	0	0	0	0	2	20	60	199	298	601	1076
6 28-30	51	34	2	0	0	0	1	2	22	75	100	136	423	1499
7 1- 3	25	16	7	0	0	0	1	10	31	81	52	91	314	1813
7 4- 6	16	24	9	0	0	0	3	13	45	75	88	74	347	2160
7 7- 9	51	76	27	3	0	0	6	9	37	72	95	101	477	2637
7 10-12	352	1209	814	112	3	0	18	21	39	143	292	461	3464	6101
7 13-15	2743	27865	27085	1424	16	3	25	40	62	204	492	726	60685	66786
7 16-18	15989	47028	36289	2013	27	2	22	44	77	289	309	477	102566	169352
7 19-21	13947	57065	50510	2924	57	12	44	94	445	591	1062	2749	129500	298852
7 22-24	173	3710	3595	350	7	0	20	31	106	290	541	992	9815	308667
7 25-27	503	2793	3133	250	10	1	19	201	108	164	435	741	8358	317025
7 28-30	148	1189	1494	136	10	3	21	56	137	303	702	867	5066	322091
7 31- 2	236	3108	6601	507	11	0	13	19	106	252	813	1069	12735	334826
8 3- 5	5147	5363	5556	596	371	370	60	65	89	195	327	465	18604	353430
8 6- 8	2367	2776	1900	94	7	2	39	86	190	282	477	1031	9251	362681
8 9-11	399	340	186	10	4	0	19	49	74	174	320	1152	2727	365408
8 12-12	76	27	17	2	1	4	17	31	45	57	95	214	586	365994*
TOTAL	42239	152647	137235	8421	524	397	339	790	1662	3365	6491	11884	365994 *	

* Total count may differ from total fish targets by bank because of method used to average for debris.

Appendix Table 6. Kenai River north bank side-scan sonar counts by hour, 22 June through 12 August 1983.

	HOUR																							
DATE	1	2	3	4	5	6	7	8	9	10	11	12	13	14	15	16	17	18	19	20	21	22	23	24
6 22	7	13	19	12	11	14	8	21	6	2	6	19	17	7	2	32	5	2	7	5	12	11	12	9
6 23	9	11	6	13	9	10	7	9	1	2	24	15	16	8	4	9	6	13	18	11	21	31	17	30
6 24	9	12	4	13	10	15	8	5	12	19	20	25	9	9	11	4	5	12	13	5	9	5	62	4
6 25	20	7	28	17	17	15	2	27	1	0	0	7	39	52	34	12	10	12	7	17	9	14	2	2
6 26	3	7	8	14	7	1	7	3	37	5	1	9	21	9	24	16	4	14	5	9	15	11	11	10
6 27	7	8	18	3	19	26	6	39	11	8	28	14	13	11	13	67	10	8	12	20	16	15	25	19
6 28	19	19	12	26	17	9	7	17	11	19	26	9	22	12	10	7	13	9	19	15	29	11	12	38
6 29	11	14	15	22	23	11	6	5	23	12	7	12	8	8	11	11	8	20	8	12	16	15	17	4
6 30	13	9	6	10	14	13	7	22	27	9	2	2	11	16	12	11	8	36	14	18	25	6	13	22
7 1	13	7	13	6	12	6	12	8	7	5	8	6	10	3	8	2	10	11	5	3	4	14	19	3
7 2	9	15	7	4	1	4	4	3	0	0	0	0	4	6	8	10	1	1	5	4	3	4	9	13
7 3	13	11	4	4	2	2	2	1	0	5	4	5	4	9	0	12	4	13	8	7	8	9	26	7
7 4	14	2	9	1	6	9	3	1	1	7	5	3	10	2	7	5	6	4	2	10	9	11	11	5
7 5	14	7	5	8	3	8	0	0	0	0	6	1	4	6	11	4	7	7	4	3	6	7	9	19
7 6	21	17	10	3	13	12	5	5	3	3	7	4	3	2	0	0	3	4	1	3	1	3	2	0
7 7	1	0	2	0	3	0	1	6	4	7	0	6	1	4	6	4	8	7	7	6	4	9	6	3
7 8	2	8	0	3	4	5	6	8	1	1	5	7	3	2	2	2	0	0	0	3	0	1	3	2
7 9	1	0	0	1	0	4	0	1	0	2	0	1	1	0	0	0	0	2	0	2	1	0	0	0
7 10	36	36	36	36	2	1	3	0	0	36	36	36	36	7	57	34	25	11	16	21	72	37	54	123
7 11	33	50	82	38	32	48	35	50	46	48	43	72	54	199	92	86	74	45	42	42	60	33	29	43
7 12	32	66	50	12	20	22	27	78	64	52	50	84	109	65	31	20	29	32	38	101	102	177	171	126
7 13	103	183	194	73	307	181	219	304	18	0	35	162	227	76	189	189	120	152	238	362	310	317	265	355
7 14	415	288	80	84	361	739	810	618	671	110	157	121	67	142	126	135	87	101	208	377	886	1147	711	516
7 15	316	186	129	87	187	422	399	369	254	218	401	395	407	227	446	551	597	774	1060	1343	1457	892	880	753
7 16	517	306	201	197	398	552	496	457	393	396	428	603	538	566	1463	463	593	715	987	1376	1042	652	425	445
7 17	236	104	78	59	246	402	621	355	637	641	727	387	310	654	544	440	557	499	823	943	887	1262	1161	389
7 18	162	168	174	92	212	581	701	900	728	798	1157	974	1327	1204	976	778	1142	740	1072	1614	1436	1054	1003	1221
7 19	2993	2234	871	1157	834	1110	1333	641	534	580	447	443	641	917	829	505	636	402	720	734	767	958	404	456
7 20	464	505	622	390	691	1025	1173	1189	863	559	565	1355	1670	1618	1408	1566	1400	985	1421	1976	1174	1008	1225	1782
7 21	3071	1434	1304	548	619	480	918	544	152	0	28	330	546	577	811	627	348	507	768	680	897	1478	563	521
7 22	425	229	241	246	428	497	385	129	474	126	158	182	474	474	474	474	646	816	629	1105	812	1203	576	188
7 23	75	155	161	444	418	391	167	159	142	89	95	119	216	294	294	309	451	449	492	529	846	482	154	97
7 24	89	44	68	96	702	371	929	498	405	179	478	464	415	361	463	462	518	675	514	493	474	434	490	470
7 25	318	152	78	134	164	94	77	150	97	92	99	207	135	67	28	28	38	63	37	186	161	182	432	278
7 26	229	148	118	131	508	514	413	213	175	117	108	216	267	280	279	385	383	366	293	454	486	297	151	125
7 27	29	25	17	39	92	143	70	52	53	20	36	44	76	26	69	43	38	23	50	78	110	199	155	37
7 28	40	42	14	66	175	130	140	77	99	18	61	92	55	125	47	54	70	71	184	409	196	246	140	194
7 29	143	87	73	98	91	95	93	121	34	52	101	107	40	57	36	52	60	62	64	54	44	26	92	187
7 30	81	59	16	46	25	93	35	76	46	51	29	31	51	20	39	16	21	37	51	65	101	63	80	74
7 31	57	39	23	32	89	69	169	126	86	58	54	75	43	37	45	19	64	38	60	144	96	181	471	453
8 1	179	135	52	68	150	130	93	113	149	74	97	62	66	73	70	52	53	153	128	147	226	374	290	427
8 2	323	229	85	136	130	130	139	138	128	77	100	60	99	49	57	85	33	32	31	35	102	204	118	60
8 3	96	79	43	43	33	33	43	23	28	19	19	27	16	9	7	13	9	13	22	33	24	66	35	32
8 4	61	60	25	5	7	3	7	6	3	102	102	102	102	102	102	102	102	102	102	144	295	497	522	535
8 5	327	235	316	268	117	119	152	187	131	170	389	443	274	413	607	348	825	875	947	1189	304	137	568	791
8 6	831	782	429	315	270	139	204	189	85	119	55	79	67	110	98	74	95	56	74	88	68	45	285	338
8 7	336	294	140	52	26	49	18	32	8	17	9	13	31	23	23	20	23	20	23	25	18	19	103	174
8 8	156	80	79	65	62	11	19	28	8	22	10	16	25	56	27	10	23	23	20	50	47	64	243	229
8 9	134	73	72	77	29	30	26	27	28	29	49	37	81	59	48	52	51	32	53	49	38	95	184	148
8 10	83	68	30	20	11	20	35	46	19	26	10	47	22	26	30	30	36	47	41	48	62	144	77	254
8 11	202	79	48	42	28	80	54	80	75	76	45	28	23	18	28	17	17	16	8	24	8	20	23	47
8 12	62	11	19	6	12	12	3	2	17	7	7	11	9	13	19	7	14	14	13	16	12	9	44	47

Appendix Table 7. Kenai River north bank side-scan sonar counts by hour, three day time periods, 22 June through 12 August 1983.

DATE	HOUR 1-2	3-4	5-6	7-8	9-10	11-12	13-14	15-16	17-18	19-20	21-22	23-24	TOTAL	CUMULATIVE TOTAL
6 22-24	61	67	69	58	42	109	66	62	43	59	89	134	859	859
6 25-27	52	88	85	84	62	59	145	166	58	70	80	69	1018	1877
6 28-30	85	91	87	64	101	58	77	62	94	86	102	106	1013	2890
7 1- 3	68	38	27	30	17	23	36	40	40	32	42	77	470	3360
7 4- 6	75	36	51	14	14	26	27	27	31	23	37	46	407	3767
7 7- 9	12	6	16	22	15	19	11	14	17	18	15	14	179	3946
7 10-12	253	254	125	193	246	321	470	320	216	260	481	546	3685	7631
7 13-15	1491	647	2197	2719	1271	1271	1146	1636	1831	3588	5009	3480	26286	33917
7 16-18	1493	801	2391	3530	3593	4276	4599	4664	4246	6815	6333	4644	47385	81302
7 19-21	10701	4892	4759	5798	2688	3168	5969	5746	4278	6299	6282	4951	65531	146833
7 22-24	1017	1256	2807	2267	1415	1496	2234	2476	3555	3762	4251	1975	28511	175344
7 25-27	901	517	1515	975	554	710	851	832	911	1098	1435	1178	11477	186821
7 28-30	452	313	609	542	300	421	348	244	321	827	676	767	5820	192641
7 31- 2	962	396	698	778	572	448	367	328	373	545	1183	1819	8469	201110
8 3- 5	858	700	312	418	453	1082	916	1179	1926	2437	1323	2483	14087	215197
8 6- 8	2479	1080	557	490	259	182	312	252	240	280	261	1372	7764	222961
8 9-11	639	289	198	268	253	216	229	205	199	223	367	733	3819	226780
8 12-12	73	25	24	5	24	18	22	26	28	29	21	91	386	227166*
TOTAL	21672	11496	16527	18255	11879	13903	17825	18279	18407	26451	27987	24485	227166*	

* Total count may differ from total fish targets by bank because of method used to average for debris.

Appendix Table 8. Kenai River south bank side-scan sonar counts by hour, 22 June through 12 August 1983.

	HOUR																							
DATE	1	2	3	4	5	6	7	8	9	10	11	12	13	14	15	16	17	18	19	20	21	22	23	24
6 22	6	6	6	6	6	6	6	6	6	6	4	5	17	4	4	6	3	1	16	10	4	14	7	3
6 23	6	5	2	13	7	2	1	2	6	7	8	1	13	3	2	2	15	5	7	22	11	7	12	9
6 24	7	4	3	3	4	1	24	1	1	6	1	7	6	6	13	7	24	6	9	2	13	0	0	1
6 25	23	3	20	6	15	11	3	36	11	3	0	5	8	0	0	1	1	8	7	9	4	21	32	21
6 26	5	15	5	1	5	2	12	3	5	9	0	3	0	3	6	7	1	33	18	23	10	3	3	2
6 27	0	4	1	3	2	8	4	6	12	12	0	21	16	12	3	16	29	5	2	2	3	5	8	5
6 28	7	12	8	16	13	2	0	0	1	11	7	4	0	6	8	15	0	15	10	25	31	3	3	6
6 29	10	5	8	0	18	0	8	0	0	3	6	0	1	1	17	1	10	4	6	6	5	10	3	3
6 30	1	4	1	5	6	8	2	2	4	3	7	3	2	3	0	5	1	8	8	0	0	5	4	13
7 1	16	6	3	2	2	1	4	14	7	2	5	3	4	3	8	9	0	7	4	3	3	10	7	4
7 2	9	2	0	0	3	7	0	0	1	2	3	2	7	1	0	0	0	2	2	5	2	9	3	3
7 3	4	9	2	4	4	8	3	0	6	0	2	4	0	10	2	1	6	2	12	14	9	2	14	6
7 4	3	6	9	1	3	6	2	0	0	0	2	0	5	2	5	9	4	6	3	13	9	1	2	2
7 5	10	5	0	1	2	1	0	0	0	2	1	2	0	4	4	4	5	4	6	3	4	2	8	11
7 6	10	12	4	0	4	0	5	2	2	3	6	10	9	8	10	13	5	3	9	20	18	14	5	3
7 7	12	19	2	1	6	0	6	0	9	0	0	3	0	1	2	11	3	8	6	9	3	3	9	13
7 8	1	2	1	0	4	5	3	0	2	5	0	6	5	9	10	2	4	5	9	10	16	13	18	15
7 9	15	8	10	9	6	15	5	7	2	2	5	4	6	18	12	17	11	5	15	10	3	1	12	8
7 10	118	62	17	10	6	19	6	6	1	3	3	17	32	16	45	40	84	36	17	29	36	58	26	190
7 11	223	121	41	10	7	10	5	39	29	54	51	33	13	52	15	37	51	20	75	23	54	52	48	88
7 12	72	49	33	19	13	16	11	31	12	3	12	21	19	39	21	15	37	17	39	38	72	192	208	447
7 13	555	398	135	27	15	18	12	19	24	37	35	107	24	196	314	470	694	333	63	315	784	618	340	461
7 14	583	396	94	26	30	60	31	35	40	87	45	51	39	268	200	223	542	1584	1862	2721	1357	677	1620	2213
7 15	1852	941	444	167	152	953	301	504	309	233	210	151	379	993	588	1931	1213	4560	5216	5618	4101	2730	2269	4092
7 16	2892	1419	537	523	652	1120	572	1000	515	63	83	188	470	628	141	1053	1772	2071	1712	1629	961	626	1016	578
7 17	549	709	437	193	234	237	147	152	141	341	181	95	127	85	344	481	565	424	669	2236	2692	695	1616	3389
7 18	3049	1722	1787	682	661	1425	1724	2240	1667	1804	1835	1401	1397	2734	1130	3534	2972	4119	5130	4143	4187	4925	4605	4733
7 19	4912	3879	1470	939	943	1509	1953	1761	148	1142	334	791	1278	2868	1660	2620	4599	3857	2971	2416	1535	2281	4093	5205
7 20	5571	4664	3243	2562	1676	1687	1227	2731	1880	983	970	718	1386	915	1774	2810	3986	4004	1658	728	320	375	1032	3627
7 21	3574	2570	1271	785	248	406	842	543	293	245	124	491	766	821	394	1270	1039	1121	717	1983	1371	1154	1215	566
7 22	581	859	788	[illegible]	84	72	97	100	27	23	17	17	20	51	18	32	33	62	168	170	384	73	77	902
7 23	1369	118	51	162	13	23	6	13	2	2	58	14	50	43	58	118	120	127	81	119	60	42	116	49
7 24	27	110	51	32	25	74	71	38	20	42	31	25	34	61	84	58	100	71	50	66	51	45	85	242
7 25	336	258	141	31	17	13	23	61	31	24	45	6	28	26	102	167	227	221	11	67	50	99	393	1108
7 26	1025	563	342	210	122	108	51	95	47	140	124	67	74	91	75	105	89	99	62	85	94	40	57	217
7 27	203	70	37	13	15	13	13	7	10	20	9	18	11	11	19	32	21	36	83	43	80	40	53	34
7 28	269	224	155	62	8	19	25	23	21	14	25	82	69	44	61	58	93	19	70	46	34	33	62	241
7 29	400	272	160	116	47	22	11	13	34	52	101	107	40	57	36	52	60	62	64	54	44	26	92	187
7 30	136	185	94	11	20	32	35	30	29	18	29	58	24	28	39	45	49	50	28	41	44	22	66	87
7 31	99	81	44	35	21	32	62	55	94	96	136	28	368	29	88	10	106	255	260	233	203	161	299	500
8 1	685	449	254	107	35	44	143	152	137	140	171	135	315	49	189	244	161	434	288	357	237	318	618	663
8 2	504	512	253	113	42	63	106	197	147	141	55	50	26	57	65	140	94	99	20	36	16	21	109	249
8 3	185	224	135	20	5	15	3	7	14	19	9	13	10	7	10	13	5	16	25	16	32	38	48	254
8 4	266	211	154	128	36	27	22	11	25	282	282	282	282	282	282	282	282	387	919	769	616	531	1012	749
8 5	564	570	268	178	75	123	263	332	392	413	573	549	554	885	503	116	450	440	200	289	477	461	440	247
8 6	140	64	71	33	71	105	214	211	165	147	121	139	200	287	217	278	267	424	352	108	245	158	208	176
8 7	103	97	61	46	89	119	58	68	80	93	59	59	87	93	82	79	137	82	129	103	79	96	159	161
8 8	67	64	48	43	65	81	58	111	109	69	51	56	168	84	113	238	235	256	120	151	134	149	102	59
8 9	27	19	13	6	25	36	59	66	50	30	25	49	44	37	71	75	55	67	88	95	74	61	24	16
8 10	21	21	27	43	49	38	29	19	12	9	14	13	31	17	19	30	37	68	34	46	36	51	76	24
8 11	18	17	13	8	47	57	30	33	31	49	38	46	33	35	68	52	57	28	39	36	47	36	20	13
8 12	23	6	11	8	3	18	10	14	11	17	18	15	26	22	59	42	58	52	43	12	50	24	21	23

Appendix Table 9. Kenai River south bank side-scan sonar counts by hour, three day time periods, 22 June through 12 August 1983.

DATE	HOUR 1-2	3-4	5-6	7-8	9-10	11-12	13-14	15-16	17-18	19-20	21-22	23-24	TOTAL	CUMULATIVE TOTAL
6 22-24	34	33	26	40	32	26	49	34	54	66	49	32	475	475
6 25-27	50	36	43	64	52	29	39	33	77	61	46	71	601	1076
6 28-30	39	38	47	12	22	27	13	46	38	55	54	32	423	1499
7 1- 3	46	11	25	21	18	19	25	20	17	40	35	37	314	1813
7 4- 6	46	15	16	9	7	21	28	45	27	54	48	31	347	2160
7 7- 9	57	23	36	21	20	18	39	54	36	59	39	75	477	2637
7 10-12	645	130	71	98	102	137	171	173	245	221	464	1007	3464	6101
7 13-15	4725	893	1228	902	730	599	1899	3726	8926	15795	10267	10995	60685	66786
7 16-18	10340	4159	4329	5835	4531	3783	5441	6683	11923	15519	14086	15937	102566	169352
7 19-21	25170	10270	6469	9057	4691	3428	8034	10528	18606	10473	7036	15738	129500	298852
7 22-24	3064	1937	291	325	116	162	259	368	513	654	655	1471	9815	308667
7 25-27	2455	774	288	250	272	269	241	500	693	351	403	1862	8358	317025
7 28-30	1486	598	148	137	168	402	262	291	333	303	203	735	5066	322091
7 31- 2	2330	806	237	715	755	575	844	736	1149	1194	956	2438	12735	334826
8 3- 5	2020	883	281	638	1145	1708	2020	1206	1580	2218	2155	2750	18604	353430
8 6- 8	535	302	530	720	663	485	919	1007	1401	963	861	865	9251	362681
8 9-11	123	110	252	236	181	185	197	315	312	338	305	173	2727	365408
8 12-12	29	19	21	24	28	33	48	101	110	55	74	44	586	365994*
TOTAL	53194	21037	14338	19104	13533	11906	20528	25866	46040	48419	37736	54293	365994*	

* Total count may differ from total fish targets by bank because of method used to average for debris.

Appendix Table 10. Total number of fish targets and estimated species composition recorded by north bank sonar in the Kenai River, 22 June through 12 August 1983*.

Date Mo Day	Fish Targets	Accum	Number of Fish: Sockeye	Accum	Coho	Accum	King	Accum
6/22	263	263	261	261	2	2	0	0
6/23	300	563	298	559	2	4	0	0
6/24	297	860	295	854	2	6	0	0
6/25	357	1217	354	1208	3	9	0	0
6/26	249	1466	247	1455	2	11	0	0
6/27	415	1881	412	1867	3	14	0	0
6/28	394	2275	391	2258	3	17	0	0
6/29	297	2572	295	2553	2	19	0	0
6/30	98	2670	97	2650	1	20	0	0
7/ 1	198	2868	197	2847	1	21	0	0
7/ 2	161	3029	160	3007	1	22	0	0
7/ 3	159	3188	158	3165	1	23	0	0
7/ 4	142	3330	141	3306	1	24	0	0
7/ 5	133	3463	132	3438	1	25	0	0
7/ 6	124	3587	123	3561	1	26	0	0
7/ 7	89	3676	88	3649	1	27	0	0
7/ 8	72	3748	71	3720	1	28	0	0
7/ 9	128	3876	127	3847	1	29	0	0
7/10	463	4339	460	4307	3	32	0	0
7/11	1321	5660	1312	5619	9	41	0	0
7/12	1558	7218	1547	7166	11	52	0	0
7/13	6591	13809	6544	13710	47	99	0	0
7/14	12893	26702	12802	26512	91	190	0	0
7/15	18352	45054	18222	44734	130	320	0	0
7/16	20452	65506	20452	65186	0	320	0	0
7/17	17648	83154	17648	82834	0	320	0	0
7/18	24614	107768	24551	107385	63	383	0	0
7/19	25789	133557	25789	133174	0	383	0	0
7/20	30970	164527	30970	164144	0	383	0	0
7/21	21132	185659	21132	185276	0	383	0	0
7/22	13406	199065	13406	198682	0	383	0	0
7/23	8075	207140	7846	206528	184	567	46	46

-Continued-

Appendix Table 10. Total number of fish targets and estimated species composition recorded by north bank sonar in the Kenai River, 22 June through 12 August 1983* [continued].

Date Mo Day	Fish Targets	Accum	Number of Fish Sockeye	Accum	Coho	Accum	King	Accum
7/24	11339	218479	11017	217545	258	825	64	110
7/25	3972	222451	3859	221404	90	915	23	133
7/26	6656	229107	6467	227871	151	1066	38	171
7/27	885	229992	860	228731	20	1086	5	176
7/28	2745	232737	2667	231398	62	1148	16	192
7/29	1869	234606	1816	233214	42	1190	11	203
7/30	1205	235811	1171	234385	27	1217	7	210
7/31	2528	238339	2456	236841	57	1274	14	224
8/ 1	3477	241816	3378	240219	79	1353	20	244
8/ 2	3266	245082	3173	243392	74	1427	19	263
8/ 3	1020	246102	991	244383	23	1450	6	269
8/ 4	2491	248593	2420	246803	57	1507	14	283
8/ 5	10132	258725	9844	256647	230	1737	58	341
8/ 6	3866	262591	3756	260403	88	1825	22	363
8/ 7	1496	264087	1454	261857	34	1859	9	372
8/ 8	1374	265461	1335	263192	31	1890	8	380
8/ 9	1283	266744	1247	264439	29	1919	7	387
8/10	1259	268003	1016	265455	236	2155	7	394
8/11	1078	269081	870	266325	202	2357	6	400
8/12	389	269470	314	266639	73	2430	2	402
Total	269470		266639		2430		402	

* Sonar counts apportioned by fish wheel counts.
Round-off error estimated(worst case) +/- 1 fish per day.

Appendix Table 11. Total number of fish targets and estimated species composition recorded by south bank sonar in the Kenai River 22 June through 12 August 1983*.

Date Mo Day	Fish Targets	Accum	Number of Fish Sockeye	Accum	Coho	Accum	King	Accum
6/22	173	173	173	173	0	0	0	0
6/23	172	345	172	345	0	0	0	0
6/24	148	493	148	493	0	0	0	0
6/25	248	741	248	741	0	0	0	0
6/26	175	916	175	916	0	0	0	0
6/27	181	1097	181	1097	0	0	0	0
6/28	204	1301	204	1301	0	0	0	0
6/29	114	1415	114	1415	0	0	0	0
6/30	322	1737	322	1737	0	0	0	0
7/ 1	118	1855	118	1855	0	0	0	0
7/ 2	69	1924	69	1924	0	0	0	0
7/ 3	122	2046	122	2046	0	0	0	0
7/ 4	87	2133	87	2133	0	0	0	0
7/ 5	82	2215	82	2215	0	0	0	0
7/ 6	175	2390	175	2390	0	0	0	0
7/ 7	122	2512	122	2512	0	0	0	0
7/ 8	144	2656	144	2656	0	0	0	0
7/ 9	239	2895	239	2895	0	0	0	0
7/10	875	3770	875	3770	0	0	0	0
7/11	1151	4921	1151	4921	0	0	0	0
7/12	1436	6357	1436	6357	0	0	0	0
7/13	5994	12351	5994	12351	0	0	0	0
7/14	14784	27135	14784	27135	0	0	0	0
7/15	37938	65073	37938	65073	0	0	0	0
7/16	22222	87295	22222	87295	0	0	0	0
7/17	17268	104563	17268	104563	0	0	0	0
7/18	63604	168167	63604	168167	0	0	0	0
7/19	55163	223330	55163	223330	0	0	0	0
7/20	50527	273857	50527	273857	0	0	0	0
7/21	23713	297570	23713	297570	0	0	0	0
7/22	5508	303078	5508	303078	0	0	0	0
7/23	2814	305892	2814	305892	0	0	0	0
7/24	1489	307381	1489	307381	0	0	0	0

- Continued -

Appendix Table 11. Total number of fish targets and estimated species composition recorded by south bank sonar in the Kenai River, 22 June through 12 August 1983* [continued].

Date Mo Day	Fish Targets	Accum	Number of Fish Sockeye	Accum	Coho	Accum	King	Accum
7/25	3485	310866	3485	310866	0	0	0	0
7/26	3992	314858	3992	314858	0	0	0	0
7/27	1521	316379	1521	316379	0	0	0	0
7/28	1757	318136	1757	318136	0	0	0	0
7/29	2109	320245	2109	320245	0	0	0	0
7/30	1201	321446	1201	321446	0	0	0	0
7/31	3295	324741	3295	324741	0	0	0	0
8/ 1	6325	331066	6325	331066	0	0	0	0
8/ 2	3115	334181	3115	334181	0	0	0	0
8/ 3	1122	335303	1122	335303	0	0	0	0
8/ 4	6899	342202	6899	342202	0	0	0	0
8/ 5	8927	351129	8927	351129	0	0	0	0
8/ 6	4400	355529	4400	355529	0	0	0	0
8/ 7	2218	357747	2218	357747	0	0	0	0
8/ 8	2631	360378	2631	360378	0	0	0	0
8/ 9	1121	361499	1121	361499	0	0	0	0
8/10	765	362264	765	362264	0	0	0	0
8/11	851	363115	851	363115	0	0	0	0
8/12	586	363701	586	363701	0	0	0	0
Total	363701		363701		0		0	

* Sonar counts apportioned by fish wheel counts.
Round-off error estimated(worst case) +/- 1 fish per day.

Appendix Table 12. Daily fishwheel catch by species from the Kenai River, 6 July through 15 August 1983[1] [2].

Date	Number Wheels	Hours Opened	Sockeye	Coho	Chinook
7/07	1	24			
7/08	1	24			
7/09	1	24			
7/10	1	24	7		
7/11	1	24	4		
7/12	1	24	12		
7/13	1	24	13		
7/14	1	24	18		
7/15	2	24	226	2	
7/16	2	24	223		
7/17	2	2	40		
7/18	2	24	390	1	
7/19		0			
7/20	2	24	465		
7/21		0			
7/22	2	24	199		
7/23		0			
7/24		0			
7/25	2	24	8		
7/26	2	24	42		
7/27	2	24	12		
7/28	2	24	19		
7/29		0			
7/30		0			
7/31		0			
8/01		0			
8/02		0			
8/03		0			
8/04		0			
8/05		0			
8/06 [1]	1	24	19		
8/07	1	24	6		
8/08	1	24	37	2	1
8/09	1	24	28	2	1
8/10	1	24	33	9	
8/11	1	24	30	7	
8/12	1	24	24	2	
8/13	1	24	14	4	1
8/14	1	24	16	3	
8/15	1	24	21	7	
Total			1,906	39	3

[1] Fishwheel catch adjusted for 24 hours: $\frac{\text{daily catch x 24 hours}}{\text{hours open}}$

[2] Fishwheels on north bank from 6 July through 5 August; south bank from 6 August through 15 August.

Appendix Table 13. Length composition of the major age classes of sockeye salmon collected in the Kenai River, 1976-1983[1].

		Male			Female			Total			
Year	Age Class	Average Length (mm)[1]	Standard Error	Sample Size	Average Length (mm)	Standard Error	Sample Size	Average Length (mm)	Standard Error	Sample Size	Ratio Male-Female
1976	1.2	500	7.7	41	516	7.7	22	506	--	63	1.9:1
1979		493	9.7	41	528	6.6	33	508	6.4	74	1.2:1
1980		482	3.9	168	494	3.6	100	486	--	268	1.7:1
1981		493	5.6	85	513	5.6	73	502	--	158	1.2:1
1982		483	8.9	70	505	12.6	32	490	10.0	63	2.2:1
1983		524	8.7	25	520	5.5	30	522	5.0	55	0.8:1
1976	1.3	594	12.0	16	590	3.2	25	592	--	41	0.6:1
1977		615	4.9	40	593	2.7	77	601	--	117	0.5:1
1978		--	--	287	--	--	388	597	1.3	675	0.7:1
1979		605	3.2	122	587	2.4	114	596	2.1	236	1.1:1
1980		580	2.9	180	561	2.2	192	570	--	372	0.9:1
1981		590	1.8	290	569	1.3	430	577	--	720	0.7:1
1982		596	1.9	723	572	1.3	841	583	1.6	1,564	0.9:1
1983		598	2.1	215	577	1.2	269	586	1.1	484	0.8:1

Appendix Table 13, continued. Length composition of the major age classes of sockeye salmon collected in the Kenai River, 1976-1983[1].

		Male			Female			Total			
Year	Age Class	Average Length (mm)[1]	Standard Error	Sample Size	Average Length (mm)	Standard Error	Sample Size	Average Length (mm)	Standard Error	Sample Size	Ratio Male-Female
1976	2.2	543	9.6	14	533	11.1	10	539	--	24	1.4:1
1979		545	10.9	17	543	7.9	23	544	6.5	40	0.7:1
1980		525	12.8	13	534	4.2	35	532	--	48	0.4:1
1982		530	13.8	21	522	8.1	30	525	10.5	51	0.7:1
1977	2.3	616	10.5	4	607	8.5	4	612	--	8	1.0:1
1980		589	2.7	67	579	3.2	80	584	--	147	0.8:1
1982		598	4.9	46	580	8.4	21	592	6.0	67	2.2:1
1983		595	4.2	--	582	4.2	--	587	3.0	61	0.7:1

[1] Length measured from mid-eye to fork of tail.

Appendix Table 14. Weight composition of the major age classes of sockeye salmon collected in the Kenai River, 1981-1983.

		Male			Female			Total		
Year	Age Class	Average Weight (kg)	Standard Error	Sample Size	Average Weight (kg)	Standard Error	Sample Size	Average Weight (kg)	Standard Error	Sample Size
1981	1.2	2.1	0.07	85	2.3	0.07	73	2.2	--	158
1982		1.9	0.15	47	2.0	0.20	16	1.9	0.17	63
1983		2.2	0.09	25	2.2	0.07	30	2.2	0.06	55
1981	1.3	3.8	0.04	290	3.2	0.02	430	3.4	--	720
1982		4.0	0.06	413	3.3	0.04	444	3.7	0.05	857
1983		3.7	0.04	215	3.2	0.02	269	3.4	0.02	484
1981	2.2	2.3	0.08	42	2.3	0.06	46	2.3	--	88
1982		2.3	0.31	14	2.2	0.22	17	2.2	0.26	31
1981	2.3	3.3	0.13	20	3.3	0.10	27	3.3	--	47
1982		3.6	0.16	26	3.3	0.26	13	3.5	0.19	39
1983		3.5	0.10	26	3.2	0.07	35	3.3	0.06	61

Appendix Table 15. Total number of fish targets and estimated species composition recorded by side scan sonar in the Kasilof River, 11 June through 31 June, 1983*.

Date Mo Day	Fish Targets	Accum	Number of Fish Sockeye	Accum	Pink	Accum	Coho	Accum	King	Accum
6/11	292	292	265	265	0	0	0	0	27	27
6/12	413	705	375	640	0	0	0	0	38	65
6/13	403	1108	366	1006	0	0	0	0	37	102
6/14	318	1426	289	1295	0	0	0	0	29	131
6/15	476	1902	432	1727	0	0	0	0	44	175
6/16	507	2409	460	2187	0	0	0	0	47	222
6/17	524	2933	476	2663	0	0	0	0	48	270
6/18	578	3511	525	3188	0	0	0	0	53	323
6/19	614	4125	557	3745	0	0	0	0	57	380
6/20	580	4705	526	4271	0	0	0	0	54	434
6/21	506	5211	459	4730	0	0	0	0	47	481
6/22	643	5854	583	5313	0	0	0	0	60	541
6/23	853	6707	774	6087	0	0	0	0	79	620
6/24	522	7229	474	6561	0	0	0	0	48	668
6/25	388	7617	353	6914	0	0	0	0	35	703
6/26	384	8001	348	7262	0	0	0	0	36	739
6/27	462	8463	451	7713	3	3	0	0	8	747
6/28	694	9157	677	8390	4	7	0	0	13	760
6/29	1040	10197	1014	9404	6	13	0	0	19	779
6/30	4422	14619	4332	13736	22	35	0	0	67	846
7/ 1	9067	23686	9018	22754	49	84	0	0	0	846
7/ 2	2480	26166	2467	25221	13	97	0	0	0	846
7/ 3	4874	31040	4779	30000	48	145	0	0	48	894
7/ 4	5229	36269	5123	35123	53	198	0	0	53	947
7/ 5	1950	38219	1906	37029	22	220	0	0	22	969
7/ 6	2159	40378	2051	39080	70	290	0	0	39	1008
7/ 7	1960	42338	1865	40945	56	346	0	0	39	1047
7/ 8	1661	43999	1582	42527	46	392	0	0	33	1080
7/ 9	3398	47397	3241	45768	83	475	0	0	74	1154
7/10	6917	54314	6567	52335	230	705	0	0	120	1274
7/11	4529	58843	4387	56722	31	736	0	0	112	1386
7/12	6266	65109	6066	62788	42	778	0	0	158	1544

-Continued-

Appendix Table 15. Total number of fish targets and estimated species composition recorded by side scan sonar in the Kasilof River, 11 June through 31 June, 1983* [continued].

Date Mo Day	Fish Targets	Accum	Number of Fish Sockeye	Accum	Pink	Accum	Coho	Accum	King	Accum
7/13	11206	76315	10848	73636	75	853	0	0	283	1827
7/14	15096	91411	14594	88230	100	953	0	0	401	2228
7/15	10635	102046	10294	98524	72	1025	0	0	269	2497
7/16	7389	109435	7090	105614	60	1085	0	0	238	2735
7/17	25057	134492	24315	129929	214	1299	25	25	504	3239
7/18	20691	155183	20178	150107	68	1367	0	25	444	3683
7/19	3470	158653	3350	153457	13	1380	5	30	102	3785
7/20	2427	161080	2175	155632	87	1467	2	32	165	3950
7/21	4309	165389	3882	159514	158	1625	0	32	268	4218
7/22	4335	169724	3942	163456	148	1773	0	32	247	4465
7/23	2532	172256	2227	165683	79	1852	0	32	226	4691
7/24	2062	174318	1814	167497	61	1913	0	32	188	4879
7/25	1710	176028	1505	169002	45	1958	0	32	159	5038
7/26	1186	177214	1044	170046	27	1985	0	32	114	5152
7/27	1066	178280	938	170984	30	2015	0	32	98	5250
7/28	908	179188	799	171783	23	2038	0	32	86	5336
7/29	1207	180395	1061	172844	41	2079	0	32	105	5441
7/30	1547	181942	1360	174204	50	2129	0	32	136	5577
7/31	3708	185650	3259	177463	138	2267	0	32	312	5889
Total	185650		177463		2267		32		5889	
**	32808		210271							

* Sonar counts apportioned by fish wheel counts.
Round-off error estimated(worst case) +/- 1 fish per day.

** Remainder of run extrapolated based on normal run timing as follows:
Prior to 6/11- 9484
After 7/31-23324

Appendix Table 16. Total number of fish targets and estimated species composition recorded by north bank sonar in the Kasilof River, 11 June through 31 July 1983*.

Date Mo Day	Fish Targets	Accum	Number of Fish Sockeye	Accum	Pink	Accum	Coho	Accum	King	Accum
6/11	229	229	208	208	0	0	0	0	21	21
6/12	262	491	238	446	0	0	0	0	24	45
6/13	284	775	258	704	0	0	0	0	26	71
6/14	229	1004	208	912	0	0	0	0	21	92
6/15	302	1306	274	1186	0	0	0	0	28	120
6/16	373	1679	338	1524	0	0	0	0	35	155
6/17	394	2073	358	1882	0	0	0	0	36	191
6/18	414	2487	376	2258	0	0	0	0	38	229
6/19	451	2938	409	2667	0	0	0	0	42	271
6/20	343	3281	311	2978	0	0	0	0	32	303
6/21	306	3587	278	3256	0	0	0	0	28	331
6/22	352	3939	319	3575	0	0	0	0	33	364
6/23	543	4482	493	4068	0	0	0	0	50	414
6/24	325	4807	295	4363	0	0	0	0	30	444
6/25	232	5039	211	4574	0	0	0	0	21	465
6/26	191	5230	173	4747	0	0	0	0	18	483
6/27	178	5408	175	4922	1	1	0	0	2	485
6/28	260	5668	255	5177	1	2	0	0	4	489
6/29	316	5984	310	5487	1	3	0	0	4	493
6/30	3381	9365	3319	8806	15	18	0	0	46	539
7/ 1	5776	15141	5745	14551	31	49	0	0	0	539
7/ 2	1520	16661	1512	16063	8	57	0	0	0	539
7/ 3	2631	19292	2536	18599	48	105	0	0	48	587
7/ 4	2941	22233	2835	21434	53	158	0	0	53	640
7/ 5	1207	23440	1163	22597	22	180	0	0	22	662
7/ 6	1316	24756	1240	23837	65	245	0	0	12	674
7/ 7	1015	25771	956	24793	50	295	0	0	9	683
7/ 8	833	26604	785	25578	41	336	0	0	7	690
7/ 9	1453	28057	1369	26947	71	407	0	0	13	703
7/10	4357	32414	4104	31051	214	621	0	0	39	742
7/11	2970	35384	2887	33938	21	642	0	0	63	805
7/12	3710	39094	3606	37544	26	668	0	0	78	883
7/13	6697	45791	6509	44053	47	715	0	0	141	1024

- Continued -

Appendix Table 16. Total number of fish targets and estimated species composition recorded by north bank sonar in the Kasilof River, 11 June through 31 July 1983*

Date Mo Day	Fish Targets	Accum	Number of Fish Sockeye	Accum	Pink	Accum	Coho	Accum	King	Accum
7/14	7072	52863	6873	50926	50	765	0	0	149	1173
7/15	6237	59100	6062	56988	44	809	0	0	131	1304
7/16	3992	63092	3821	60809	39	848	0	0	131	1435
7/17	10586	73678	10390	71199	123	971	25	25	49	1484
7/18	9805	83483	9703	80902	0	971	0	25	102	1586
7/19	1438	84921	1395	82297	0	971	5	30	38	1624
7/20	479	85400	465	82762	0	971	2	32	13	1637
7/21	1006	86406	983	83745	11	982	0	32	11	1648
7/22	1371	87777	1340	85085	16	998	0	32	16	1664
7/23	749	88526	662	85747	0	998	0	32	87	1751
7/24	690	89216	610	86357	0	998	0	32	81	1832
7/25	689	89905	609	86966	0	998	0	32	80	1912
7/26	568	90473	502	87468	0	998	0	32	66	1978
7/27	386	90859	341	87809	0	998	0	32	45	2023
7/28	382	91241	337	88146	0	998	0	32	45	2068
7/29	289	91530	255	88401	0	998	0	32	34	2102
7/30	413	91943	365	88766	0	998	0	32	48	2150
7/31	603	92546	533	89299	0	998	0	32	70	2220
Total	92546		89299		998		32		2220	

* Sonar counts apportioned by fish wheel counts.
Round-off error estimated(worst case) +/- 1 fish per day.

Appendix Table 17. Total number of fish targets and estimated species composition recorded by south bank sonar in the Kasilof River, 11 June through 31 July 1983*.

Date Mo Day	Fish Targets	Accum	Number of Fish Sockeye	Accum	Pink	Accum	Coho	Accum	King	Accum
6/11	63	63	57	57	0	0	0	0	6	6
6/12	151	214	137	194	0	0	0	0	14	20
6/13	119	333	108	302	0	0	0	0	11	31
6/14	89	422	81	383	0	0	0	0	8	39
6/15	174	596	158	541	0	0	0	0	16	55
6/16	134	730	122	663	0	0	0	0	12	67
6/17	130	860	118	781	0	0	0	0	12	79
6/18	164	1024	149	930	0	0	0	0	15	94
6/19	163	1187	148	1078	0	0	0	0	15	109
6/20	237	1424	215	1293	0	0	0	0	22	131
6/21	200	1624	181	1474	0	0	0	0	19	150
6/22	291	1915	264	1738	0	0	0	0	27	177
6/23	310	2225	281	2019	0	0	0	0	29	206
6/24	197	2422	179	2198	0	0	0	0	18	224
6/25	156	2578	142	2340	0	0	0	0	14	238
6/26	193	2771	175	2515	0	0	0	0	18	256
6/27	284	3055	276	2791	2	2	0	0	6	262
6/28	434	3489	422	3213	3	5	0	0	9	271
6/29	724	4213	704	3917	5	10	0	0	15	286
6/30	1041	5254	1013	4930	7	17	0	0	21	307
7/ 1	3291	8545	3273	8203	18	35	0	0	0	307
7/ 2	960	9505	955	9158	5	40	0	0	0	307
7/ 3	2243	11748	2243	11401	0	40	0	0	0	307
7/ 4	2288	14036	2288	13689	0	40	0	0	0	307
7/ 5	743	14779	743	14432	0	40	0	0	0	307
7/ 6	843	15622	811	15243	5	45	0	0	27	334
7/ 7	945	16567	909	16152	6	51	0	0	30	364
7/ 8	828	17395	797	16949	5	56	0	0	26	390
7/ 9	1945	19340	1872	18821	12	68	0	0	61	451
7/10	2560	21900	2463	21284	16	84	0	0	81	532
7/11	1559	23459	1500	22784	10	94	0	0	49	581
7/12	2556	26015	2460	25244	16	110	0	0	80	661
7/13	4509	30524	4339	29583	28	138	0	0	142	803

-Continued-

Appendix Table 17. Total number of fish targets and estimated species composition recorded by south bank sonar in the Kasilof River, 11 June through 31 July 1983* [continued].

Date Mo Day	Fish Targets	Accum	Number of Fish: Sockeye	Accum	Pink	Accum	Coho	Accum	King	Accum
7/14	8024	38548	7721	37304	50	188	0	0	252	1055
7/15	4398	42946	4232	41536	28	216	0	0	138	1193
7/16	3397	46343	3269	44805	21	237	0	0	107	1300
7/17	14471	60814	13925	58730	91	328	0	0	455	1755
7/18	10886	71700	10475	69205	68	396	0	0	342	2097
7/19	2032	73732	1955	71160	13	409	0	0	64	2161
7/20	1948	75680	1710	72870	87	496	0	0	152	2313
7/21	3303	78983	2899	75769	147	643	0	0	257	2570
7/22	2964	81947	2602	78371	132	775	0	0	231	2801
7/23	1783	83730	1565	79936	79	854	0	0	139	2940
7/24	1372	85102	1204	81140	61	915	0	0	107	3047
7/25	1021	86123	896	82036	45	960	0	0	79	3126
7/26	618	86741	542	82578	27	987	0	0	48	3174
7/27	680	87421	597	83175	30	1017	0	0	53	3227
7/28	526	87947	462	83637	23	1040	0	0	41	3268
7/29	918	88865	806	84443	41	1081	0	0	71	3339
7/30	1134	89999	995	85438	50	1131	0	0	88	3427
7/31	3105	93104	2726	88164	138	1269	0	0	242	3669
Total	93104		88164		1269		0		3669	

* Sonar counts apportioned by fish wheel counts.
Round-off error estimated(worst case) +/- 1 fish per day.

Appendix Table 18. Summary of Kasilof sonar-site tagged sockeye salmon recoveries, 1983.

Tag No.	Date Tagged	Date Recovered
Bear Creek		
00024	6/29/83	
00025	6/29/83	8/04/83
00060	6/29/83	7/31/83
00089	6/30/83	8/01/83
00096	6/30/83	8/16/83
00100	6/30/83	8/01/83
00103	6/30/83	8/01/83
00113	6/30/83	8/05/83
00132	6/30/83	8/03/83
00134	6/30/83	7/31/83
00142	6/30/83	7/31/83
00155	6/30/83	8/09/83
00162	6/30/83	8/05/83
00166	6/30/83	8/07/83
00168	6/30/83	7/31/83
00174	6/30/83	8/01/83
00181	6/30/83	7/31/83
00184	6/30/83	8/04/83
00191	6/30/83	8/04/83
00205	6/30/83	8/16/83
00208	6/30/83	8/09/83
00213	6/30/83	8/05/83
00223	7/02/83	8/05/83
00230	7/02/83	8/05/83
00235	7/02/83	8/01/83
00237	7/02/83	8/06/83
00241	7/02/83	8/01/83
00246	7/03/83	8/05/83
00256	7/03/83	7/29/83
00270	7/03/83	7/31/83
00271	7/03/83	8/01/83
00273	7/03/83	8/01/83
00275	7/03/83	8/05/83
00288	7/03/83	8/04/83
00302		8/01/83
00319	7/05/83	7/29/83
00322	7/05/83	8/08/83
00337	7/05/83	7/31/83
00350	7/05/83	8/16/83
00354	7/05/83	8/01/83
00358	7/06/83	8/01/83
00359	7/06/83	7/31/83
00360	7/06/83	8/29/83
00393	7/06/83	8/01/83
00397	7/06/83	8/10/83
00406	7/07/83	7/31/83
00408	7/07/83	8/01/83
Bear Creek, continued		
00410	7/07/83	Prior to 8/15/83
00423	7/07/83	8/12/83
00427	7/07/83	8/05/83
00429	7/07/83	8/04/83
00433	7/08/83	7/31/83
00440	7/08/83	8/01/83
00441	7/08/83	8/01/83
00450	7/08/83	7/29/83
00453	7/08/83	8/04/83
00454	7/08/83	8/05/83
00455	7/08/83	7/31/83
00457	7/08/83	Prior to 8/15/83
00467	7/08/83	8/05/83
00476	7/08/83	8/03/83
00478	7/08/83	8/01/83
00482	7/08/83	8/03/83
00483	7/08/83	8/01/83
00484	7/08/83	7/31/83
00492	7/09/83	8/11/83
00504	7/09/83	7/29/83
00512	7/09/83	8/05/83
00516	7/09/83	8/05/83
00519	7/09/83	7/31/83
00521	7/09/83	8/05/83
00526	7/09/83	8/10/83
00528	7/09/83	8/04/83
00530	7/09/83	8/06/83
00544	7/09/83	8/29/83
00550	7/10/83	8/03/83
00564	7/10/83	8/12/83
00570	7/10/83	
00588	7/20/83	8/04/83
00590	7/09/83	8/05/83
00594	7/10/83	8/05/83
00602	7/10/83	8/14/83
00608	7/12/83	8/05/83
00617	7/13/83	7/31/83
00624	7/13/83	8/01/83
00626	7/13/83	8/12/83
00627	7/13/83	8/08/83
00630	7/13/83	8/16/83
00635	7/13/83	7/31/83
00637	7/13/83	8/16/83
00646	7/13/83	8/16/83
00654	7/13/83	8/07/83
00668	7/14/83	8/05/83
00669	7/14/83	8/12/83

-Continued-

Appendix Table 18. Summary of Kasilof sonar-site tagged sockeye salmon recoveries, 1983 (continued).

Tag No.	Date Tagged	Date Recovered
Bear Creek, continued		
00674	7/14/83	8/03/83
00757	7/15/83	Prior to 8/15/83
00816	7/15/83	8/12/83
00851	7/16/83	8/11/83
00877	7/16/83	8/05/83
00886	7/16/83	8/31/83
00924	7/16/83	8/04/83
00936	7/16/83	8/29/83
00948	7/16/83	8/04/83
00984	7/16/83	8/14/83
00987	7/16/83	8/07/83
00989	7/16/83	8/05/83
00990	7/16/83	8/16/83
00994	7/16/83	8/10/83
00996	7/16/83	8/13/83
01003	7/16/83	8/16/83
01014	7/16/83	8/13/83
01032	7/16/83	8/16/83
01060	7/16/83	8/16/83
01063	7/16/83	8/05/83
01081	7/16/83	8/12/83
01087	7/17/83	8/11/83
01105	7/17/83	7/31/83
01108	7/17/83	8/05/83
01120	7/17/83	8/12/83
01124	7/17/83	8/11/83
01146	7/17/83	8/14/83
01217	7/17/83	8/09/83
01219	7/17/83	8/16/83
01223	7/17/83	8/12/83
01232	7/17/83	8/01/83
01249	7/17/83	8/08/83
01251	7/17/83	8/09/83
01260	7/17/83	8/08/83
01271	7/19/83	8/12/83
01273	7/19/83	8/05/83
01277	7/19/83	8/05/83
01333	7/19/83	8/05/83
01353	7/19/83	8/16/83
01404	7/21/83	8/14/83
01408	7/21/83	8/16/83
01418	7/21/83	8/09/83
01439	7/21/83	8/12/83
01453	7/21/83	8/16/83
01462	7/21/83	8/05/83
01475	7/21/83	8/16/83
01529	7/24/83	8/05/83
Bear Creek, continued		
CF03762	6/28/83	7/29/83
CF03763	6/28/83	8/05/83
CF03764	6/28/83	8/05/83
CF03769	6/23/83	7/31/83
CF03786	6/23/83	8/05/83
CF03791	6/28/83	7/31/83
CF03800	6/28/83	8/05/83
Crystal Creek		
00631	7/13/83	8/18/83
01064	7/16/83	8/18/83
01493	7/21/83	8/18/83
Clear Creek		
00326	7/05/83	8/18/83
00587	7/10/83	7/17/83
01195	7/17/83	8/18/83
CF03698	6/23/83	7/17/83
Seepage Creek		
00115	6/30/83	8/17/83
Crooked Creek		
00229	7/02/83	8/09/83
00597	7/11/83	8/14/83
01442	7/21/83	8/09/83
Kenai River		
00593	7/10/83	7/23/83
00913	7/16/83	8/07/83
00961	7/16/83	No Date
Tustumena Lake		
01388	7/21/83	9/15/83
Indian Creek		
01470	7/21/83	9/10/83
01481	7/21/83	9/10/83

-Continued-

Appendix Table 18. Summary of Kasilof sonar-site tagged sockeye salmon recoveries, 1983 (continued).

Tag No.	Date Tagged	Date Recovered
Kasilof River		
00146	7/01/83	End of July
Moose Creek		
00908	7/16/83	8/22/83
01045	7/16/83	8/22/83
01061	7/16/83	8/22/83
01086	7/17/83	8/22/83
01113	7/17/83	8/22/83
01135	7/17/83	8/22/83
01165	7/17/83	8/22/83
01171	7/17/83	8/22/83
01237	7/17/83	8/22/83
0147-	7/21/83	8/22/83
01494	7/21/83	8/22/83
01500	7/21/83	8/22/83
Nikolai Creek		
00013	6/29/83	7/29/83
00036	6/29/83	7/29/83
00079	6/29/83	7/29/83
00093	6/30/83	7/29/83
00159	7/01/83	7/29/83
00160	7/01/83	7/29/83
00187	7/01/83	7/29/83
00193	7/01/83	8/24/83
00204	7/01/83	7/29/83
00211	7/01/83	7/29/83
00245	7/03/83	7/28/83
00262	7/03/83	7/29/83
00267	7/03/83	8/01/83
00310	7/03/83	7/29/83
00339	7/05/83	7/29/83
00375	7/06/83	7/29/83
00532	7/10/83	7/29/83
00567	7/10/83	7/29/83
00640	7/13/83	7/29/83
00755	7/15/83	7/29/83
00863	7/16/83	7/29/83
CF03591	6/23/83	7/29/83
CF03758	6/27/83	7/29/83
CF03784	6/28/83	7/29/83
CF03980	6/24/83	7/29/83
Glacier Flat		
00251	7/03/83	8/13/83
00280	7/03/83	8/08/83
00327	7/05/83	8/05/83
00399	7/06/83	8/15/83
00437	7/08/83	8/07/83
00469	7/08/83	8/12/83
00596	7/11/83	8/05/83
00600	7/11/83	8/07/83
00601	7/11/83	8/04/83
00632	7/13/83	8/07/83
00644	7/13/83	8/09/83
00645	7/13/83	8/06/83
00647	7/13/83	8/07/83
00653	7/13/83	8/08/83
00658	7/13/83	8/03/83
00662	7/14/83	8/17/83
00663	7/14/83	8/07/83
00667	7/14/83	8/20/83
00784	7/15/83	8/14/83
00811	7/15/83	8/14/83
00875	7/16/83	8/07/83
00922	7/16/83	8/15/83
00954	7/16/83	8/07/83
01007	7/16/83	8/05/83
01017	7/16/83	8/10/83
01026	7/16/83	8/19/83
01027	7/16/83	8/11/83
01047	7/16/83	8/16/83
01050	7/16/83	8/16/83
01056	7/16/83	8/08/83
01073	7/16/83	8/07/83
01088	7/17/83	8/15/83
01097	7/17/83	8/10/83
01106	7/17/83	8/13/83
01123	7/17/83	8/05/83
01125	7/17/83	8/05/83
01129	7/17/83	8/08/83
01134	7/17/83	8/13/83
01144	7/17/83	8/12/83
01154	7/17/83	8/07/83
01157	7/17/83	8/08/83
01174	7/17/83	8/09/83
01213	7/17/83	8/07/83
01225	7/17/83	8/11/83

-Continued-

Appendix Table 18. Summary of Kasilof sonar-site tagged sockeye salmon recoveries, 1983 (continued).

Tag No.	Date Tagged	Date Recovered
Glacier Flat, continued		
01227	7/17/83	8/11/83
01238	7/17/83	8/14/83
01250	7/17/83	8/11/83
01255	7/17/83	8/05/83
01261	7/17/83	8/08/83
01265	7/17/83	8/07/83
01339	7/19/83	8/16/83
01352	7/19/83	8/07/83
01391	7/21/83	8/13/83
01416	7/21/83	8/11/83
01425	7/21/83	8/10/83
01444	7/21/83	8/11/83
01485	7/21/83	8/15/83
01499	7/21/83	8/07/83
01503	7/23/83	8/03/83
01517	7/24/83	8/14/83
01522	7/24/83	8/16/83
01534	7/27/83	8/12/83
01540	7/27/83	8/03/83
CF03994	6/24/83	8/03/83
East Side Set Net South of Kasilof R.		
00050	6/29/83	Unknown
00065	6/29/83	7/01/83
00343	7/05/83	7/04/83
00361	7/06/83	7/14/83
00420	7/07/83	7/18/83
00535	7/10/83	Unknown
00573	7/10/83	7/14/83
00695	7/14/83	7/16/83
00715	7/15/83	7/19/83
00748	7/15/83	Prior to 7/24/83
00775	7/15/83	Unknown
00792	7/15/83	Prior to 7/24/83
00807	7/15/83	Unknown
00834	7/15/83	7/18/83
00887	7/16/83	Prior to 7/24/83
00912	7/16/83	
00917	7/16/83	7/18/83
00992	7/16/83	7/22/83
01099	7/17/83	Unknown
01110	7/17/83	7/10/83
01220	7/17/83	7/18/83
01221	7/17/83	Prior to 7/24/83
01242	7/17/83	Unknown
01244	7/17/83	Prior to 7/24/83
East Side Set Net S. of Kasilof R., cont.		
01269	7/19/83	Unknown
01284	7/19/83	7/21/83
01298	7/19/83	Unknown
01306	7/19/83	Unknown
01316	7/19/83	7/21/83
01329	7/19/83	Unknown
01338	7/19/83	7/21/83
01354	7/19/83	Unknown
01357	7/19/83	7/22/83
01370	7/19/83	7/10/83
01382	7/21/83	Unknown
01535	7/27/83	Unknown
01536	7/27/83	Unknown
00507	6/18/83	6/22/83
3778	6/28/83	7/01/83
3802	6/28/83	7/01/83
East Side Set Net North of Kasilof R.		
00170	7/01/83	7/04/83
00194	7/01/83	7/04/83
00289	7/03/83	7/29/83
00294	7/03/83	7/11/83
00335	7/05/83	7/08/83
00369	7/05/83	7/29/83
00417	7/07/83	7/11/83
00474	7/08/83	No Date
00580	7/10/83	7/29/83
00619	7/13/83	7/15/83
00726	7/15/83	7/17/83
00733	7/15/83	7/15/83
00753	7/15/83	7/19/83
00772	7/15/83	7/22/83
00791	7/15/83	7/29/83
00794	7/15/83	7/19/83
00812	7/15/83	7/15/83
00824	7/15/83	7/22/83
00833	7/15/83	7/18/83
00854	7/15/83	7/18/83
00937	7/16/83	7/18/83
00955	7/16/83	7/15-25/83
01078	7/16/83	7/22/83
01118	7/17/83	7/29/83
01159	7/17/83	7/22/83
01290	7/19/83	7/21/83
01314	7/19/83	7/20/83
01332	7/19/83	7/22/83

-Continued-

Appendix Table 18. Summary of Kasilof sonar-site tagged sockeye salmon recoveries, 1983 (continued).

Tag No.	Date Tagged	Date Recovered	Tag No.	Date Tagged	Date Recovered
East Side Set Net N. of Kasilof R., cont.					
01358	7/19/83	7/22/83			
01460	7/21/83	7/23/83			
00518	6/22/83	6/23/83			
00595	6/22/83	6/22/83			
CF03581	6/23/83	6/25/83			
CF03694	6/23/83	6/25/83			
CF03697	6/23/83	6/25/83			
CF03702	6/23/83	6/25/83			
CF03729	6/26/83	7/10/83			
00489	6/26/83	7/15/83			
Drift					
00118	6/30/83	7/11/83			
00123	6/30/83	7/11/83			
00139	7/01/83	7/15/83			
00244	7/03/83	Unknown			
00303	7/03/83	7/11/83			
00341	7/05/83	7/11/83			
00903	7/16/83	7/15/83			
01190	7/17/83	7/22/83			
01300	7/19/83	7/22/83			
CF03778	6/28/83	7/01/83			
CF03802	6/28/83	7/01/83			
Kalgin Island					
CF02928	No record of this tag				

Appendix Table 19. Kasilof River north bank side-scan sonar counts by hour, 11 June through 31 July 1983.

	HOUR																							
DATE	1	2	3	4	5	6	7	8	9	10	11	12	13	14	15	16	17	18	19	20	21	22	23	24
6 11	4	17	9	13	14	14	4	5	2	2	2	9	12	5	8	6	2	9	25	21	12	6	10	21
6 12	18	11	6	6	6	16	6	3	7	11	14	4	13	4	8	14	11	4	13	21	19	10	17	20
6 13	29	33	14	7	2	6	14	9	7	5	11	9	7	4	5	3	15	7	10	20	28	10	19	10
6 14	11	33	10	5	4	11	8	11	3	6	1	3	4	3	5	5	5	4	11	7	10	16	23	31
6 15	32	18	18	14	4	11	9	15	17	5	6	11	11	8	7	20	0	1	5	4	5	12	33	36
6 16	49	35	23	16	11	8	11	5	17	17	9	3	7	10	11	8	5	19	5	5	5	5	40	49
6 17	54	66	23	18	30	14	6	5	15	8	18	8	8	3	7	3	13	2	19	7	7	4	18	38
6 18	78	60	39	36	10	6	9	5	4	5	4	2	27	9	4	7	6	3	8	5	8	27	16	36
6 19	62	90	25	23	43	23	18	2	6	1	1	3	7	8	14	5	6	7	23	18	12	15	7	32
6 20	42	30	46	3	14	9	4	6	2	7	14	12	19	9	18	16	11	5	3	11	19	12	16	19
6 21	41	26	66	26	16	2	1	7	1	2	9	4	8	4	4	2	8	8	10	13	9	8	13	18
6 22	24	14	34	44	22	16	15	11	4	4	7	8	7	13	6	6	11	7	7	12	16	15	29	20
6 23	54	37	42	63	27	8	5	9	7	2	2	14	14	8	17	9	11	29	28	22	27	22	20	66
6 24	22	30	32	28	23	8	11	6	8	16	7	20	7	17	6	7	9	14	8	9	11	7	7	12
6 25	23	24	13	7	16	7	2	3	5	7	6	4	8	13	5	4	6	1	26	13	9	5	14	11
6 26	5	17	8	5	17	12	6	8	0	2	6	0	11	18	8	3	7	6	11	11	5	6	14	5
6 27	4	9	17	9	10	39	5	7	5	11	9	2	10	1	5	0	9	4	1	5	2	8	5	1
6 28	10	4	5	8	13	17	24	15	3	8	10	12	8	7	17	10	10	11	7	12	12	17	6	14
6 29	9	10	24	7	27	25	23	11	14	7	9	8	19	5	14	15	10	18	12	16	10	10	6	7
6 30	3	4	16	57	10	2	17	25	19	7	4	54	151	137	119	241	293	321	382	293	522	296	264	146
7 1	241	249	221	213	213	193	197	336	383	249	91	112	427	475	419	291	226	329	217	169	147	167	112	99
7 2	97	93	82	60	55	37	44	31	52	55	73	69	39	81	50	27	57	63	42	67	81	89	112	64
7 3	85	115	141	110	91	85	56	37	73	95	99	119	116	66	36	112	147	86	75	135	116	108	291	237
7 4	161	172	188	189	111	107	106	101	124	120	123	197	111	156	131	126	126	82	99	130	79	81	71	60
7 5	40	78	74	83	67	31	26	22	29	28	38	21	33	52	20	46	79	92	92	59	51	49	60	38
7 6	84	51	22	63	35	49	56	57	48	37	45	35	49	120	178	108	65	60	48	26	25	23	17	14
7 7	20	59	32	20	17	29	29	22	21	25	39	47	49	53	103	64	41	36	20	30	38	47	102	73
7 8	63	114	99	68	31	35	54	44	41	18	22	26	20	20	19	24	27	18	29	11	8	13	14	15
7 9	22	12	46	56	12	22	39	60	60	15	18	18	17	26	53	61	61	27	107	192	188	134	82	124
7 10	200	221	276	557	230	93	91	184	163	131	95	75	51	46	22	40	145	188	50	246	406	477	206	164
7 11	156	212	195	142	262	137	108	182	129	28	145	119	93	92	110	55	74	112	139	80	92	107	101	100
7 12	99	92	126	193	287	362	60	79	202	75	112	103	88	82	68	160	166	223	320	137	103	222	192	159
7 13	164	255	374	430	439	662	634	132	69	225	171	178	240	123	257	201	268	344	328	346	181	275	189	212
7 14	178	130	134	226	252	221	338	587	300	173	278	399	307	318	380	387	416	393	181	328	389	213	222	322
7 15	345	236	318	328	370	383	194	320	496	301	96	292	366	350	327	386	209	46	51	376	143	140	98	67
7 16	58	51	69	77	62	59	90	223	40	45	187	55	120	164	151	193	183	293	304	322	351	460	261	174
7 17	124	225	339	261	263	284	205	327	466	716	997	877	396	294	277	327	550	553	332	302	597	392	669	813
7 18	682	367	282	405	682	680	403	572	566	650	690	447	661	627	420	348	307	382	62	37	180	98	75	182
7 19	226	156	99	84	150	112	28	39	128	53	55	27	14	35	46	41	11	18	18	11	15	21	16	35
7 20	24	29	39	22	19	13	10	18	21	19	19	22	31	38	22	23	11	18	15	11	19	13	7	16
7 21	13	24	45	36	25	21	45	43	25	28	22	13	37	29	63	116	82	32	10	9	62	87	78	61
7 22	52	42	65	90	54	81	69	56	90	51	43	42	46	59	70	30	97	95	56	42	28	45	40	28
7 23	29	30	16	22	41	12	9	16	22	45	9	24	24	70	46	16	51	68	36	35	39	26	32	33
7 24	27	24	19	15	21	28	27	27	19	31	15	17	61	25	33	20	26	25	41	32	19	29	50	43
7 25	34	38	40	30	27	41	32	21	17	23	50	50	43	28	15	11	10	18	35	47	30	21	14	14
7 26	30	37	26	17	28	28	23	12	35	24	20	12	12	24	18	23	16	25	16	22	24	29	33	32
7 27	24	33	25	16	14	12	12	18	14	7	7	15	14	12	13	13	20	14	15	15	19	17	11	28
7 28	23	25	29	23	23	18	26	27	19	9	8	19	16	4	14	7	10	10	7	9	16	5	10	26
7 29	11	14	12	10	9	16	11	6	7	10	13	11	12	11	10	8	12	12	12	9	9	16	25	23
7 30	13	20	16	23	26	18	14	11	12	10	10	8	14	15	20	8	14	21	15	13	34	23	28	27
7 31	43	37	36	21	27	13	19	10	9	20	20	19	30	32	26	21	17	23	27	38	24	26	44	21

Appendix Table 20. Kasilof River south bank side-scan sonar counts by hour, three day time periods, 11 June through 31 July 1983.

DATE	HOUR 1-2	3-4	5-6	7-8	9-10	11-12	13-14	15-16	17-18	19-20	21-22	23-24	TOTAL	CUMULATIVE TOTAL
6 11-15	71	51	42	74	32	38	45	21	16	28	75	100	593	593
6 16-20	192	88	41	42	31	21	50	55	40	61	58	147	826	1419
6 21-25	161	134	80	47	78	40	41	88	102	117	164	102	1154	2573
6 26-30	221	191	314	361	204	186	167	110	156	240	332	202	2684	5257
7 1- 5	541	546	697	968	1058	749	1157	880	902	710	755	599	9562	14819
7 6-10	555	687	561	735	488	325	364	572	544	864	895	544	7134	21953
7 11-15	1402	1153	2704	2543	2045	2311	1432	849	1790	2157	1730	924	21040	42993
7 16-20	1824	1564	2860	2611	2716	3546	2839	2645	1359	3208	3904	3660	32736	75729
7 21-25	856	1179	1985	1466	748	469	483	537	792	514	556	856	10441	86170
7 26-30	320	276	253	272	309	280	339	318	282	395	405	423	3872	90042
7 31-31	117	131	170	150	198	488	762	280	178	195	283	151	3103	93145*
TABLE	6260	6000	9707	9269	7907	8453	7679	6355	6161	8489	9157	7708	93145*	

* Total count may differ from total fish targets by bank because of method used to average for debris.

Appendix Table 21. Kasilof River south bank side-scan sonar counts by hour, 11 June through 31 July 1983.

	HOUR																							
DATE	1	2	3	4	5	6	7	8	9	10	11	12	13	14	15	16	17	18	19	20	21	22	23	24
6 11	1	2	7	5	4	3	0	8	1	0	3	5	2	2	3	0	1	0	2	1	2	0	7	4
6 12	8	12	6	4	3	1	9	5	1	7	6	5	12	3	6	5	3	3	1	4	11	16	8	9
6 13	11	14	10	3	2	3	9	4	2	7	4	7	10	4	2	0	5	0	5	2	9	1	3	2
6 14	4	3	4	1	1	4	3	4	2	2	3	0	3	2	1	1	2	0	0	4	13	13	8	11
6 15	14	2	6	5	10	11	21	11	8	2	2	3	1	6	1	2	0	2	8	1	3	7	26	22
6 16	18	11	4	8	5	4	1	2	4	4	1	0	5	2	2	1	5	3	4	1	0	10	16	23
6 17	14	4	10	10	4	1	4	4	4	7	2	3	11	1	2	5	5	4	4	1	2	3	1	25
6 18	29	24	12	2	9	1	6	7	2	2	1	3	2	4	3	5	4	1	1	4	8	6	14	14
6 19	20	23	15	7	5	10	0	6	1	0	0	2	2	7	5	2	4	5	8	5	5	6	6	13
6 20	32	17	15	5	1	1	1	11	4	3	4	5	5	11	18	12	7	2	9	24	11	7	7	28
6 21	25	23	15	17	6	2	1	3	12	2	4	6	2	5	2	8	9	14	5	14	1	11	9	4
6 22	14	15	14	27	4	14	4	6	10	10	2	4	3	7	7	18	10	12	16	10	21	36	12	15
6 23	13	32	25	5	11	7	3	5	9	8	5	5	5	1	12	10	10	17	15	21	29	26	16	20
6 24	10	15	11	4	10	4	5	4	11	6	1	10	5	6	7	12	7	17	9	5	13	10	4	11
6 25	6	8	8	8	10	12	3	13	5	5	1	2	3	4	2	10	1	5	8	14	10	7	9	2
6 26	12	4	5	5	23	19	18	19	9	8	5	1	4	2	3	7	5	8	5	6	12	7	5	1
6 27	2	7	9	5	15	18	26	12	5	17	9	9	18	9	9	4	8	16	25	20	13	7	18	5
6 28	6	6	9	11	17	14	29	36	21	11	20	21	22	10	6	16	11	15	17	38	40	13	24	18
6 29	55	35	31	34	55	38	65	41	12	22	31	24	10	19	15	13	12	18	24	40	50	30	16	34
6 30	42	52	43	39	52	63	45	70	63	36	21	45	43	30	15	22	33	30	17	48	93	67	35	46
7 1	96	102	92	99	81	146	184	232	319	181	86	125	217	299	184	135	160	127	112	58	98	75	55	28
7 2	17	23	28	17	19	16	19	47	35	56	45	10	38	65	58	62	48	27	51	38	29	63	97	52
7 3	40	75	56	52	71	59	86	79	82	129	133	133	109	107	92	38	87	98	96	104	160	142	109	106
7 4	68	65	68	47	70	107	114	109	123	94	72	125	146	139	127	144	131	168	96	72	62	66	47	30
7 5	17	38	48	39	84	44	48	50	20	19	9	11	21	16	14	26	27	29	54	29	33	27	18	57
7 6	54	42	30	32	31	40	35	54	37	37	26	43	48	38	54	45	43	44	31	29	28	13	2	9
7 7	31	20	26	16	12	22	29	32	42	24	23	37	42	22	49	84	40	25	85	55	75	69	57	32
7 8	47	45	40	22	24	37	35	44	50	38	28	11	35	39	43	48	43	51	36	19	26	24	16	27
7 9	16	55	121	53	48	79	95	76	39	44	8	18	18	31	25	49	107	70	186	260	216	135	106	90
7 10	125	120	159	188	147	121	157	178	102	75	72	59	38	53	93	82	51	70	54	109	137	172	109	96
7 11	152	69	77	77	125	85	80	62	55	64	42	26	50	42	42	54	39	58	56	66	63	59	44	63
7 12	63	76	65	37	89	141	61	81	98	89	108	112	88	70	61	168	101	79	208	129	114	181	168	173
7 13	157	187	139	210	418	556	571	196	66	127	155	115	150	140	70	125	143	137	110	261	172	96	88	119
7 14	153	144	136	133	338	324	310	506	281	682	601	787	478	99	76	97	434	491	592	486	398	307	88	84
7 15	218	183	130	149	277	351	343	333	346	237	147	218	228	87	89	67	157	151	132	117	150	190	63	34
7 16	56	59	81	67	104	151	213	149	113	291	156	128	118	120	141	126	152	217	157	144	177	191	136	153
7 17	108	150	190	153	245	276	341	505	596	239	654	780	235	671	917	583	126	288	844	1094	1492	1433	1467	1082
7 18	503	321	268	351	854	671	554	531	481	782	577	1065	522	1009	424	176	247	87	218	479	193	142	135	296
7 19	203	198	118	155	115	264	168	17	26	58	58	31	17	37	49	53	68	58	25	74	22	61	74	84
7 20	105	121	100	81	79	101	79	54	51	79	51	46	67	43	33	143	60	56	111	62	74	119	141	92
7 21	93	126	217	203	218	367	202	151	117	101	50	121	110	71	77	112	209	129	36	78	71	85	176	184
7 22	163	220	201	312	262	259	176	142	113	73	42	52	84	54	34	56	88	81	42	60	68	162	114	103
7 23	74	49	70	27	211	329	215	70	60	82	45	27	26	39	18	45	74	72	47	31	20	45	68	40
7 24	29	30	32	21	55	141	203	115	72	31	11	25	30	18	79	89	49	62	105	46	16	21	54	38
7 25	22	50	38	58	37	106	103	89	39	60	46	50	23	28	12	15	20	8	19	50	42	26	29	50
7 26	35	25	16	46	38	38	34	63	27	17	21	12	9	9	8	17	15	7	26	41	27	21	32	34
7 27	42	27	24	33	5	17	17	9	8	21	13	28	35	9	11	11	27	11	39	77	55	56	42	62
7 28	56	30	31	32	27	11	15	54	37	8	9	32	15	11	11	11	9	4	6	17	25	20	25	29
7 29	16	31	15	16	19	18	17	11	46	46	55	28	87	59	45	61	45	31	47	40	45	48	62	30
7 30	36	22	30	33	46	34	38	14	50	49	28	54	35	70	73	70	63	70	55	47	49	59	48	59
7 31	52	65	76	55	89	81	68	82	82	116	191	297	338	424	147	133	65	113	102	93	158	125	103	48

Appendix Table 22. Kasilof River north bank side-scan sonar counts by hour, three day time periods, 11 June through 31 July 1983.

DATE	HOUR 1-2	3-4	5-6	7-8	9-10	11-12	13-14	15-16	17-18	19-20	21-22	23-24	TOTAL	CUMULATIVE TOTAL
6 11-15	206	102	88	84	65	70	71	81	58	137	128	220	1310	1310
6 16-20	566	252	168	71	82	74	107	93	77	104	114	271	1979	3289
6 21-25	295	355	145	70	56	81	99	66	104	148	129	210	1758	5047
6 26-30	75	156	172	141	76	114	367	432	689	750	888	468	4328	9375
7 1- 5	1331	1361	990	956	1208	942	1556	1258	1287	1085	968	1144	14086	23461
7 6-10	846	1239	553	636	559	420	451	672	668	759	1359	811	8973	32434
7 11-15	1867	2466	3375	2634	1998	1893	2059	2331	2251	2286	1865	1662	26687	59121
7 16-20	1942	1677	2324	1915	2704	3376	2380	1848	2326	1414	2146	2248	26300	85421
7 21-25	313	378	351	345	351	285	422	420	504	343	386	393	4491	89912
7 26-30	230	197	192	160	147	123	134	134	154	133	192	243	2039	91951
7 31-31	80	57	40	29	29	39	62	47	40	65	50	65	603	92554*
TOTAL	7751	8240	8398	7041	7275	7417	7708	7382	8158	7224	8225	7735	92554*	

* Total count may differ from total fish targets by bank because of method used to average for debris.

Appendix Table 23. Kasilof River north bank side-scan sonar counts by sector, 11 June through 31 July 1983.

DATE	SECTOR 1	2	3	4	5	6	7	8	9	10	11	12	TOTAL
6 11	43	50	27	3	2	3	2	16	17	18	14	37	232
6 12	57	23	23	4	0	0	8	14	23	37	17	56	262
6 13	51	59	33	2	1	0	8	14	25	30	21	40	284
6 14	85	44	11	2	1	1	3	10	17	17	16	23	230
6 15	97	55	23	5	2	0	7	17	25	32	13	26	302
6 16	127	93	25	1	4	1	6	6	22	31	17	40	373
6 17	171	83	33	1	0	0	4	7	19	17	25	34	394
6 18	204	63	30	1	0	0	6	3	21	38	23	25	414
6 19	218	67	28	5	1	0	5	9	23	34	19	42	451
6 20	131	68	17	7	4	2	6	12	27	34	7	32	347
6 21	82	84	15	1	1	0	3	14	21	31	22	32	306
6 22	73	94	17	2	2	0	3	16	32	51	28	34	352
6 23	176	146	12	4	1	1	0	14	37	65	50	37	543
6 24	92	80	3	3	4	1	0	10	27	27	47	31	325
6 25	63	48	5	2	4	0	0	6	18	26	41	19	232
6 26	72	37	13	0	1	1	2	5	13	24	10	13	191
6 27	57	42	6	0	1	0	0	4	13	8	20	27	178
6 28	46	109	14	0	1	2	1	2	16	20	22	27	260
6 29	89	127	4	1	0	0	0	1	8	28	22	36	316
6 30	1713	1331	221	40	1	2	8	14	9	13	17	14	3383
7 1	2328	2643	495	85	10	3	32	50	40	37	29	24	5776
7 2	476	696	189	41	3	4	14	18	23	11	15	30	1520
7 3	896	1053	347	76	9	1	33	47	43	43	36	47	2631
7 4	1030	1111	371	105	46	41	34	52	45	38	37	41	2951
7 5	457	464	163	28	4	2	12	13	18	9	16	22	1208
7 6	471	490	186	47	5	0	14	18	30	19	16	19	1315
7 7	497	311	112	27	3	0	11	16	14	10	8	7	1016
7 8	345	299	95	11	3	2	10	15	18	10	13	12	833

-Continued-

Appendix Table 23. Kasilof River north bank side-scan sonar counts by sector, 11 June through 31 July 1983 [continued].

DATE	SECTOR 1	2	3	4	5	6	7	8	9	10	11	12	TOTAL
7 9	672	335	190	51	20	18	35	41	36	24	17	13	1452
7 10	3134	667	281	35	4	2	50	53	54	34	17	26	4357
7 11	2276	365	104	8	1	0	27	36	40	41	15	57	2970
7 12	3064	382	100	3	1	0	20	29	49	48	10	4	3710
7 13	6158	245	77	48	0	1	16	36	38	38	21	19	6697
7 14	6500	311	95	6	1	1	15	33	39	43	10	18	7072
7 15	5864	199	66	3	1	1	12	9	30	26	11	16	6238
7 16	3649	139	56	1	16	0	11	21	29	43	12	15	3992
7 17	9595	382	280	13	1	0	26	64	77	106	27	15	10586
7 18	9116	303	128	20	1	0	16	35	56	76	23	31	9805
7 19	1091	77	39	4	0	0	19	33	49	82	20	24	1438
7 20	296	26	30	1	0	0	9	18	33	51	13	2	479
7 21	680	143	33	3	0	0	14	25	32	37	19	20	1006
7 22	710	351	27	1	0	0	12	44	60	106	47	13	1371
7 23	277	171	18	1	0	1	29	64	49	53	60	28	751
7 24	273	175	29	2	1	0	17	34	31	46	34	32	674
7 25	347	135	11	1	2	1	2	17	8	17	52	96	689
7 26	252	106	22	0	1	0	5	11	18	39	41	71	566
7 27	203	66	10	1	2	0	0	3	5	12	49	37	388
7 28	161	52	7	2	0	0	2	5	14	22	47	71	383
7 29	138	45	4	2	1	0	2	5	11	13	17	51	289
7 30	213	51	6	0	1	0	3	5	12	19	25	78	413
7 31	399	62	5	4	3	1	2	12	14	27	38	36	603
TOTAL	65215	14558	4136	714	171	93	576	1056	1428	1761	1246	1600	92554 *

* Total count may differ from total fish targets by bank because of method used to average for debris.

Appendix Table 24. Kasilof River north bank side-scan sonar counts by sector, three day time periods, 11 June through 31 July 1983.

DATE	SECTOR 1	2	3	4	5	6	7	8	9	10	11	12	TOTAL	CUMULATIVE TOTAL
6 11-15	333	231	117	16	6	4	28	71	107	134	81	182	1310	1310
6 16-20	851	374	133	15	9	3	27	37	112	154	91	173	1979	3289
6 21-25	486	452	52	12	12	2	6	60	135	200	188	153	1758	5047
6 26-30	1977	1646	258	41	4	5	11	26	59	93	91	117	4328	9375
7 1- 5	5187	5967	1565	335	72	51	125	180	169	138	133	164	14086	23461
7 6-10	5119	2102	864	171	35	22	120	143	152	97	71	77	8973	32434
7 11-15	23862	1502	442	68	4	3	90	143	196	196	67	114	26687	59121
7 16-20	23747	927	533	39	18	0	81	171	244	358	95	87	26300	85421
7 21-25	2287	975	118	8	3	2	74	184	180	259	212	189	4491	89912
7 26-30	967	320	49	5	5	0	12	29	60	105	179	308	2039	91951
7 31-31	399	62	5	4	3	1	2	12	14	27	38	36	603	92554*
TOTAL	65215	14558	4136	714	171	93	576	1056	1428	1761	1246	1600	92554*	

* Total count may differ from total fish targets by bank because of method used to average for debris.

Appendix Table 25. Kasilof River south bank side-scan sonar counts by sector, 11 June through 31 July 1983.

DATE	SECTOR 1	2	3	4	5	6	7	8	9	10	11	12	TOTAL
6 11	9	8	3	1	0	1	7	3	2	11	6	12	63
6 12	31	15	3	3	0	0	7	9	12	22	21	25	148
6 13	15	18	2	1	0	0	8	15	9	10	23	18	119
6 14	14	4	1	1	0	0	8	3	6	9	9	34	89
6 15	11	12	5	0	0	0	8	20	15	21	36	46	174
6 16	17	8	7	3	0	0	4	4	15	14	21	41	134
6 17	16	6	7	1	0	0	6	3	9	22	23	38	131
6 18	27	24	8	1	0	0	6	11	9	11	26	41	164
6 19	14	34	10	0	0	0	4	5	16	16	25	33	157
6 20	37	27	16	5	1	3	13	11	21	33	30	43	240
6 21	1	4	16	6	0	0	15	13	23	36	48	38	200
6 22	3	6	6	2	0	0	14	22	37	61	53	87	291
6 23	4	14	15	6	2	0	18	20	42	32	53	104	310
6 24	7	9	3	0	0	0	16	13	17	51	30	51	197
6 25	8	5	3	2	0	0	16	15	15	24	20	48	156
6 26	6	6	18	11	2	1	21	10	20	32	26	40	193
6 27	20	14	12	6	0	0	28	22	38	35	36	75	286
6 28	16	17	30	9	3	1	47	49	61	65	56	77	431
6 29	80	94	79	19	1	2	33	41	69	102	67	137	724
6 30	149	174	148	34	7	7	53	50	81	96	110	141	1050
7 1	426	775	625	170	16	6	128	270	168	165	219	323	3291
7 2	85	85	94	50	14	18	53	98	59	87	135	182	960
7 3	333	297	228	55	5	3	50	187	154	280	280	371	2243
7 4	515	376	240	56	11	5	99	143	129	187	182	347	2290
7 5	172	161	107	34	3	0	30	48	32	36	59	96	778
7 6	166	177	92	30	2	1	25	40	52	75	82	103	845
7 7	214	209	100	26	9	4	47	56	39	53	68	124	949
7 8	163	201	95	22	2	5	24	56	37	41	51	131	828

-Continued-

Appendix Table 25. Kasilof River south bank side-scan sonar counts by sector, 11 June through 31 July 1983 [continued].

DATE	SECTOR 1	2	3	4	5	6	7	8	9	10	11	12	TOTAL
7 9	574	479	188	57	1	2	76	91	64	62	112	239	1945
7 10	832	747	247	67	11	3	54	60	100	103	108	235	2567
7 11	664	366	135	26	6	3	47	53	61	31	55	103	1550
7 12	1453	475	225	67	26	19	22	32	49	60	58	74	2560
7 13	3685	484	145	8	2	0	5	10	14	44	58	53	4508
7 14	6900	744	181	65	2	0	8	7	25	27	31	35	8025
7 15	3370	556	227	27	31	1	15	19	34	33	54	30	4397
7 16	2126	737	238	35	11	2	15	21	45	82	33	55	3400
7 17	9858	3184	863	255	10	7	19	24	46	89	59	55	14469
7 18	6263	2979	1006	219	17	5	34	35	45	79	72	132	10886
7 19	835	448	271	105	6	2	17	21	27	80	93	128	2033
7 20	942	399	263	81	21	2	17	15	12	57	43	96	1948
7 21	2054	582	244	60	27	2	14	25	30	72	79	115	3304
7 22	1923	496	186	45	4	1	9	13	29	59	59	137	2961
7 23	1121	280	124	20	1	0	18	10	19	42	37	112	1784
7 24	842	172	113	28	6	0	9	12	20	41	37	92	1372
7 25	496	173	112	20	4	1	13	19	18	33	30	101	1020
7 26	342	143	49	7	4	1	6	4	2	15	16	29	618
7 27	471	119	28	5	0	0	1	1	3	5	18	28	679
7 28	318	133	29	8	1	0	1	2	1	3	8	21	525
7 29	700	170	22	0	0	0	2	0	0	4	9	11	918
7 30	879	147	46	2	0	1	1	2	0	9	18	27	1132
7 31	2621	356	98	2	0	0	0	1	1	2	4	18	3103
TOTAL	51828	17149	7013	1763	269	109	1191	1714	1832	2659	2886	4732	93145*

* Total count may differ from total fish targets by bank because of method used to average for debris.

Appendix Table 26. Kasilof River south bank side-scan sonar counts by sector, three day time periods, 11 June through 31 July 1983.

DATE	SECTOR 1	2	3	4	5	6	7	8	9	10	11	12	TOTAL	CUMULATIVE TOTAL
6 11-15	80	57	14	6	0	1	38	50	44	73	95	135	593	593
6 16-20	111	99	48	10	1	3	33	34	70	96	125	196	826	1419
6 21-25	23	38	43	16	2	0	79	83	134	204	204	328	1154	2573
6 26-30	271	305	287	79	13	11	182	172	269	330	295	470	2684	5257
7 1- 5	1531	1694	1294	365	49	32	360	746	542	755	875	1319	9562	14819
7 6-10	1949	1813	722	202	25	15	226	303	292	334	421	832	7134	21953
7 11-15	16072	2625	913	193	67	23	97	121	183	195	256	295	21040	42993
7 16-20	20024	7747	2641	695	65	18	102	116	175	387	300	466	32736	75729
7 21-25	6436	1703	779	173	42	4	63	79	116	247	242	557	10441	86170
7 26-30	2710	712	174	22	5	2	11	9	6	36	69	116	3872	90042
7 31-31	2621	356	98	2	0	0	0	1	1	2	4	18	3103	93145*
TOTAL	51828	17149	7013	1763	269	109	1191	1714	1832	2659	2886	4732	93145*	

* Total count may differ from total fish targets by bank because of method used to average for debris.

Appendix Table 27. Daily fishwheel catch by species on the north bank of the Kasilof River, 3 July through 28 July 1983[1] [2].

Date	Hours Open	Sockeye	Pink	Coho	Chinook
7/03	18.1	105			1
7/04	18.2	40	2		1
7/05	23.5	15	1		1
7/06	23.2	18	1		
7/07	25.3	11	1		
7/08	14.3	76	5		
7/09	27.3	33			1
7/10	19.2	73	4		1
7/11	31.8	19			
7/12	17.9	16			1
7/13	28.1	40	1		
7/14	17.3	28	1		1
7/15	18.3	312	1		7
7/16	21.1	291	3		10
7/17	31.7	423	5	1	2
7/18	16.0	284			3
7/19	18.0	139		1	5
7/20	26.0	118			2
7/21	21.8	100	2		2
7/22	27.1	72			
7/23	18.7	6			1
7/24	24.8	2			
7/25	22.8	3			
7/26	24.0	0			
7/27	24.5	20			4
7/28	23.5	21			2
Total		2,265	27	2	44

[1] Fishwheel catch adjusted for 24 hours: $\frac{\text{daily catch x 24 hours}}{\text{hours open}}$

[2] Actual catch: sockeye - 2,094; pink - 26; coho - 2; and, chinook - 40.

Appendix Table 28. Daily fishwheel catch by species on the south bank of the Kasilof River, 17 June through 24 July, 1983[1] [2].

Date	Hours Open	Sockeye	Pink	Coho	Chinook
6/17	23.5	7			
6/18	19.3	4			
6/19	31.8	4			2
6/20	15.0	0			0
6/21	22.9	2			1
6/22	22.6	24			2
6/23	26.0	41			2
6/24	21.5	27			3
6/25	24.6	22			3
6/26	23.8	16			2
6/27	23.8	20			1
6/28	27.8	37	1		1
6/29	24.3	87			1
6/30	18.0	71			
7/01	22.8	114	1		
7/02	19.8	70			
7/03	29.3	43			1
7/04	19.5	95			
7/05	22.7	30	1		1
7/06	23.5	30			3
7/07	25.4	16			1
7/08	23.0	14	1		1
7/09	28.0	9			
7/10	20.4	9			
7/11	23.3	10			
7/12	0 [3]				
7/13	0 [3]				
7/14	0 [3]				
7/15	0 [3]				
7/16	0 [3]				
7/17	6.9	38			
7/18	21.5	15			
7/19	19.6	12			
7/20	25.7	3			
7/21	21.9	3	1		
7/22	26.2	2			
7/23	18.9	10	1		1
7/24	24.9	16	2		
Total		899	8		26

[1] Fishwheel catch adjusted for 24 hours: $\frac{\text{daily catch x 24 hours}}{\text{hours open}}$

[2] Actual catch: sockeye - 829; pink - 8; and, chinook - 27.

[3] Closed for repairs.

Appendix Table 29. Length composition of the major age classes of sockeye salmon collected in the Kasilof River, 1976-1983.

		Male			Female			Total			
Year	Age Class	Average Length (mm)[1]	Standard Error	Sample Size	Average Length (mm)	Standard Error	Sample Size	Average Length (mm)	Standard Error	Sample Size	Ratio Male-Female
1976	1.2	486	3.9	26	472	10.9	40	478	--	66	0.7:1
1978		--	--	69	--	--	70	501	3.1	139	1.0:1
1979		489	2.0	175	487	2.0	139	488	1.5	314	1.3:1
1980		474	2.4	189	464	1.2	376	467	--	565	0.5:1
1981		503	2.0	241	492	2.5	146	499	--	387	1.7:1
1982		481	2.2	285	466	1.8	235	474	2.0	475	1.2:1
1983		493	1.9	113	491	2.5	78	492	1.5	191	1.4:1
1976	1.3	528	13.4	5	547	7.5	4	536	--	9	1.3:1
1978		--	--	47	--	--	55	554	2.4	102	0.9:1
1979		578	3.2	82	562	3.3	99	569	2.4	181	0.8:1
1980		531	6.8	35	516	2.4	115	520	--	150	0.3:1
1981		566	1.2	422	558	1.4	369	562	--	791	1.1:1
1982		549	1.4	377	542	1.1	428	545	1.2	805	0.9:1
1983		558	1.9	170	547	1.9	187	552	1.3	357	0.9:1

-Continued-

Appendix Table 29. Length composition of the major age classes of sockeye salmon collected in the Kasilof River, 1976-1983 (continued).

		Male			Female			Total			
Year	Age Class	Average Length (mm)[1]	Standard Error	Sample Size	Average Length (mm)	Standard Error	Sample Size	Average Length (mm)	Standard Error	Sample Size	Ratio Male-Female
1976	2.2	485	6.1	12	487	3.1	34	486	--	46	0.4:1
1982		479	3.2	65	472	2.7	81	475	2.9	146	0.8:1
1982	2.3	548	4.3	41	543	3.8	40	546	4.1	86	1.0:1

[1] Lengths measured from mid-eye to fork of tail.

Appendix Table 30. Weight composition of the major age classes of sockeye salmon collected in the Kasilof River, 1981-1983.

		Male			Female			Total		
Year	Age Class	Average Weight (kg)	Standard Error	Sample Size	Average Weight (kg)	Standard Error	Sample Size	Average Weight (kg)	Standard Error	Sample Size
1981	1.2	2.2	0.05	241	1.9	0.03	146	2.1	--	387
1982		1.8	0.03	235	1.5	0.02	240	1.7	0.03	475
1983		2.04	0.06	113	1.34	0.03	78	1.96	0.04	191
1981	1.3	3.0	0.04	422	2.9	0.03	369	3.0	--	791
1982		2.7	0.02	377	2.44	0.02	428	2.56	0.02	805
1983		2.78	0.03	168	2.47	0.02	187	2.62	0.02	355
1981	2.2	2.3	0.08	40	2.0	0.07	33	2.2	--	73
1982		1.7	0.05	65	1.6	0.04	81	1.7	0.04	146
1982	2.3	2.6	0.07	41	2.3	0.5	34	2.5	0.06	75

Appendix Table 31. Total number of fish targets and estimated species composition recorded by side scan sonar in the Crescent River, 1 July through 31 July, 1983*.

Date Mo Day	Fish Targets	Accum	Number of Fish Sockeye	Accum	Pink	Accum
7/ 1	12	12	12	12	0	0
7/ 2	14	26	14	26	0	0
7/ 3	28	54	28	54	0	0
7/ 4	152	206	152	206	0	0
7/ 5	1521	1727	1518	1724	3	3
7/ 6	2042	3769	2034	3758	8	11
7/ 7	2469	6238	2462	6220	7	18
7/ 8	2856	9094	2849	9069	7	25
7/ 9	1762	10856	1760	10829	2	27
7/10	1766	12622	1763	12592	3	30
7/11	2754	15376	2749	15341	5	35
7/12	3780	19156	3770	19111	10	45
7/13	5408	24564	5396	24507	12	57
7/14	6674	31238	6657	31164	17	74
7/15	4936	36174	4923	36087	13	87
7/16	3650	39824	3641	39728	9	96
7/17	2387	42211	2382	42110	5	101
7/18	3842	46053	3834	45944	8	109
7/19	5563	51616	5549	51493	14	123
7/20	5320	56936	5307	56800	13	136
7/21	4655	61591	4644	61444	11	147
7/22	3232	64823	3226	64670	6	153
7/23	2806	67629	2801	67471	5	158
7/24	2951	70580	2944	70415	7	165
7/25	2134	72714	2131	72546	3	168
7/26	2327	75041	2318	74864	9	177
7/27	2394	77435	2384	77248	10	187
7/28	1814	79249	1808	79056	6	193
7/29	2075	81324	2067	81123	8	201
7/30	3150	84474	3139	84262	11	212
7/31	2757	87231	2748	87010	9	221
Total	87231		87010		221	
**	5112		92343			

* Sonar counts apportioned by fish wheel counts.
Round-off error estimated(worst case) +/- 1 fish per day.
** Remainder of run extrapolated based on normal run timing.

Appendix Table 32. Crescent River north bank side-scan sonar counts by sector, 1 July through 31 July 1983

DATE	SECTOR 1	2	3	4	5	6	7	8	9	10	11	12	TOTAL
7 1	0	0	0	0	0	0	0	0	0	0	0	0	0
7 2	0	0	0	0	0	0	0	0	0	0	0	0	0
7 3	0	3	2	1	1	0	1	2	0	0	0	0	10
7 4	26	34	9	2	0	0	0	0	0	0	0	0	71
7 5	150	253	129	20	5	5	0	0	0	0	0	0	562
7 6	291	367	409	211	17	7	7	2	0	0	0	0	1311
7 7	227	163	486	199	17	21	18	9	8	9	8	8	1173
7 8	293	593	275	30	10	5	6	2	2	1	0	0	1217
7 9	92	155	101	8	0	0	0	1	0	0	0	0	357
7 10	82	191	118	16	5	3	2	1	1	0	0	0	419
7 11	223	448	154	23	14	5	4	2	0	0	0	1	874
7 12	300	788	384	48	26	8	3	5	1	2	0	0	1565
7 13	343	959	501	118	56	35	14	4	2	2	1	1	2036
7 14	715	1305	589	111	43	21	18	13	4	1	2	0	2822
7 15	283	1027	543	103	70	30	15	7	10	3	0	0	2091
7 16	251	762	372	72	34	11	14	7	8	5	1	0	1537
7 17	125	328	227	60	30	14	14	11	6	3	2	1	821
7 18	204	665	366	68	32	23	11	11	1	1	1	0	1383
7 19	390	970	570	137	70	38	18	20	4	5	0	0	2222
7 20	489	747	607	144	68	56	33	15	6	8	5	0	2178
7 21	352	971	509	114	55	42	16	18	7	4	3	0	2091
7 22	180	539	275	45	25	28	20	13	9	1	0	0	1135
7 23	124	388	238	63	11	48	17	18	6	4	1	0	918
7 24	166	676	296	46	20	33	12	6	7	2	1	1	1266
7 25	52	237	212	43	14	20	14	10	1	2	0	0	605
7 26	142	314	256	53	40	62	42	23	7	1	1	2	943
7 27	160	375	264	81	32	52	35	26	12	8	0	0	1045
7 28	136	249	157	34	18	40	13	9	8	4	0	1	669
7 29	150	301	217	46	27	36	22	8	3	3	0	0	813
7 30	216	529	292	62	21	39	15	13	3	4	1	0	1195
7 31	159	387	235	52	22	46	27	14	8	1	0	1	952
TOTAL	6321	14724	8793	2010	783	728	411	270	124	74	27	16	34281 *

* Total count may differ from total fish targets by bank because of method used to average for debris.

Appendix Table 33. Crescent River north bank side-scan sonar counts by sector, three day time periods, 1 July through 31 July 1983.

DATE	SECTOR 1	2	3	4	5	6	7	8	9	10	11	12	TOTAL	CUMULATIVE TOTAL
7 1- 3	0	3	2	1	1	0	1	2	0	0	0	0	10	10
7 4- 6	467	654	547	233	22	12	7	2	0	0	0	0	1944	1954
7 7- 9	612	911	862	237	27	26	24	12	10	10	8	8	2747	4701
7 10-12	605	1427	656	87	45	16	9	8	2	2	0	1	2858	7559
7 13-15	1341	3291	1633	332	169	86	47	24	16	6	3	1	6949	14508
7 16-18	580	1755	965	200	96	48	39	29	15	9	4	1	3741	18249
7 19-21	1231	2688	1686	395	193	136	67	53	17	17	8	0	6491	24740
7 22-24	470	1603	809	154	56	109	49	37	22	7	2	1	3319	28059
7 25-27	354	926	732	177	86	134	91	59	20	11	1	2	2593	30652
7 28-30	502	1079	666	142	66	115	50	30	14	11	1	1	2677	33329
7 31-31	159	387	235	52	22	46	27	14	8	1	0	1	952	34281 *
TOTAL	6321	14724	8793	2010	783	728	411	270	124	74	27	16	34281 *	

* Total count may differ from total fish targets by bank because of method used to average for debris.

Appendix Table 34. Crescent River south bank side-scan sonar counts by sector, 1 July through 31 July 1983.

DATE	SECTOR 1	2	3	4	5	6	7	8	9	10	11	12	TOTAL
7 1	0	0	0	0	0	0	0	0	0	0	0	0	0
7 2	0	0	0	0	0	0	0	0	0	0	0	0	0
7 3	4	5	4	1	1	0	2	0	0	0	0	0	17
7 4	6	10	3	5	17	12	13	7	3	4	1	0	81
7 5	123	262	230	99	95	66	39	30	10	3	0	0	957
7 6	63	150	184	98	56	55	32	32	15	18	13	10	726
7 7	85	290	400	163	105	78	86	66	25	28	15	2	1343
7 8	363	460	315	111	108	91	64	47	35	16	16	7	1633
7 9	128	277	388	201	174	91	79	40	10	6	2	3	1399
7 10	97	153	288	254	191	173	100	47	17	16	2	1	1339
7 11	149	192	375	321	327	269	128	60	32	16	8	4	1881
7 12	187	236	424	408	354	294	149	88	31	27	8	6	2212
7 13	326	346	745	623	579	357	183	103	49	38	11	15	3375
7 14	722	583	889	720	488	245	119	47	17	11	11	0	3852
7 15	458	518	771	479	309	158	86	25	22	13	2	4	2845
7 16	282	263	466	419	350	189	94	45	16	6	4	0	2134
7 17	219	174	344	308	223	140	82	41	20	9	3	3	1566
7 18	359	346	633	457	317	183	83	47	9	12	5	2	2453
7 19	476	460	749	544	389	252	194	134	76	43	15	6	3338
7 20	479	503	664	459	372	197	156	134	96	57	22	3	3142
7 21	237	315	476	385	391	290	189	131	55	63	27	2	2561
7 22	155	174	206	209	317	348	290	190	109	60	31	9	2098
7 23	126	123	211	205	307	371	235	159	81	54	12	4	1888
7 24	111	167	247	217	293	270	189	88	56	31	12	4	1685
7 25	119	122	184	182	249	322	184	100	39	21	6	0	1528
7 26	156	138	231	191	219	236	110	51	29	18	3	2	1384
7 27	190	209	274	187	194	152	68	42	27	4	2	0	1349
7 28	158	159	225	148	171	179	60	23	12	5	5	1	1146
7 29	188	194	253	190	202	139	62	20	6	5	1	3	1263
7 30	250	316	388	255	317	253	92	47	20	11	4	2	1955
7 31	243	293	386	246	260	214	98	28	14	11	5	4	1802
TOTAL	6459	7438	10953	8085	7375	5624	3266	1872	931	606	246	97	52952 *

* Total count may differ from total fish targets by bank because of method used to average for debris.

Appendix Table 35. Crescent River south bank side-scan sonar counts by sector, three day time periods, 1 July through 31 July 1983.

DATE	SECTOR 1	2	3	4	5	6	7	8	9	10	11	12	TOTAL	CUMULATIVE TOTAL
7 1- 3	4	5	4	1	1	0	2	0	0	0	0	0	17	17
7 4- 6	192	422	417	202	168	133	84	69	28	25	14	10	1764	1781
7 7- 9	576	1027	1103	475	387	260	229	153	70	50	33	12	4375	6156
7 10-12	433	581	1087	983	872	736	377	195	80	59	18	11	5432	11588
7 13-15	1506	1447	2405	1822	1376	760	388	175	88	62	24	19	10072	21660
7 16-18	860	783	1443	1184	890	512	259	133	45	27	12	5	6153	27813
7 19-21	1192	1278	1889	1388	1152	739	539	399	227	163	64	11	9041	36854
7 22-24	392	464	664	631	917	989	714	437	246	145	55	17	5671	42525
7 25-27	465	469	689	560	662	710	362	193	95	43	11	2	4261	46786
7 28-30	596	669	866	593	690	571	214	90	38	21	10	6	4364	51150
7 31-31	243	293	386	246	260	214	98	28	14	11	5	4	1802	52952*
TOTAL	6459	7438	10953	8085	7375	5624	3266	1872	931	606	246	97	52952*	

* Total count may differ from total fish targets by bank because of method used to average for debris.

Appendix Table 36. Crescent River north bank side-scan sonar counts by hour, 1 July through 31 July 1983.

	HOUR																							
DATE	1	2	3	4	5	6	7	8	9	10	11	12	13	14	15	16	17	18	19	20	21	22	23	24
7 1	0	0	0	0	0	0	0	0	0	0	0	0	0	0	0	0	0	0	0	0	0	0	0	0
7 2	0	0	0	0	0	0	0	0	0	0	0	0	0	0	0	0	0	0	0	0	0	0	0	0
7 3	0	0	0	0	2	1	0	0	0	0	0	0	0	0	0	0	0	1	0	0	0	2	3	1
7 4	1	4	1	2	2	0	1	1	0	0	1	0	0	5	5	1	9	6	7	7	3	4	6	5
7 5	0	2	0	0	8	8	8	15	34	10	11	20	18	52	21	24	136	57	21	80	27	4	3	3
7 6	2	1	1	2	19	10	14	32	16	19	73	48	111	69	94	158	98	221	96	107	40	21	22	37
7 7	13	13	13	28	42	14	12	12	11	27	45	52	49	125	81	109	96	198	98	78	24	15	10	8
7 8	13	8	9	12	16	24	26	42	65	49	65	105	126	105	129	105	139	124	13	10	8	8	8	8
7 9	3	2	3	2	2	6	7	12	10	21	15	47	31	32	24	28	25	34	8	23	12	6	2	2
7 10	3	2	2	2	19	8	12	25	23	4	6	11	10	20	10	29	28	45	75	53	21	4	4	3
7 11	2	2	3	5	12	54	28	11	4	2	5	7	0	34	85	117	119	93	122	96	34	35	3	1
7 12	1	1	4	0	18	12	9	23	32	63	99	87	86	96	182	288	73	177	166	67	53	19	5	4
7 13	4	0	2	0	7	26	26	22	22	84	130	69	160	51	144	179	91	384	304	237	60	25	8	1
7 14	4	4	1	2	23	73	163	152	120	291	393	206	270	171	158	119	99	201	52	126	92	66	20	16
7 15	6	6	0	15	87	115	176	206	173	137	193	92	140	156	83	48	28	87	75	102	124	28	9	5
7 16	5	3	2	7	11	29	53	125	157	180	111	74	75	78	88	146	85	41	83	54	26	26	39	39
7 17	18	4	3	7	32	31	38	72	50	38	38	70	73	60	61	31	22	20	12	22	54	25	16	28
7 18	16	5	2	9	27	32	75	115	39	79	120	62	35	180	119	85	46	64	50	29	58	68	57	11
7 19	3	4	7	7	39	118	165	192	79	124	99	46	116	177	165	135	99	196	55	103	204	75	8	6
7 20	5	2	4	3	26	26	64	179	91	205	154	146	347	158	63	114	78	100	140	106	47	46	55	19
7 21	6	15	21	18	34	71	42	87	77	71	84	105	279	155	37	192	350	145	79	65	9	29	104	16
7 22	15	19	13	17	62	64	38	52	32	64	52	52	115	89	107	87	51	45	21	12	34	31	33	30
7 23	17	12	17	28	27	12	12	67	17	29	45	49	56	27	108	47	71	39	22	27	77	66	31	15
7 24	11	1	6	15	35	33	44	22	17	74	178	184	222	52	10	98	103	36	50	32	16	14	8	5
7 25	9	4	2	4	8	9	9	14	22	63	38	55	78	24	30	47	50	43	19	25	18	9	18	7
7 26	33	19	15	15	20	13	11	29	36	29	33	80	139	109	44	25	47	31	35	40	28	32	49	31
7 27	26	45	16	11	23	34	36	30	47	29	50	101	41	67	54	67	59	78	21	34	33	45	52	46
7 28	37	14	14	8	37	30	23	21	8	13	16	40	57	46	32	35	14	17	23	30	36	29	52	37
7 29	21	42	35	14	35	32	21	20	23	38	32	68	63	26	39	35	45	48	27	56	21	16	37	19
7 30	27	15	16	20	19	39	44	89	107	87	94	93	68	51	53	43	35	49	42	31	47	25	44	57
7 31	52	40	36	18	15	16	38	52	58	42	16	29	49	72	65	61	39	58	24	31	26	35	46	34

Appendix Table 37. Crescent River north bank side-scan sonar counts by hour, three day time periods, 1 July through 31 July 1983.

DATE	HOUR 1-2	3-4	5-6	7-8	9-10	11-12	13-14	15-16	17-18	19-20	21-22	23-24	TOTAL	CUMULATIVE TOTAL
7 1- 3	0	0	3	0	0	0	0	0	1	0	2	4	10	10
7 4- 6	10	6	47	71	79	153	255	303	527	318	99	76	1944	1954
7 7- 9	52	67	104	111	183	329	468	476	616	230	73	38	2747	4701
7 10-12	11	16	123	108	128	215	246	711	535	579	166	20	2858	7559
7 13-15	24	20	331	745	827	1083	948	731	890	896	395	59	6949	14508
7 16-18	51	30	162	478	543	475	501	530	278	250	257	190	3745	18253
7 19-21	35	60	314	729	647	634	1232	706	968	548	410	208	6491	24744
7 22-24	75	96	233	235	233	560	561	457	345	164	238	122	3319	28063
7 25-27	136	63	107	129	226	357	458	267	308	174	165	203	2593	30656
7 28-30	156	107	192	218	276	343	311	237	208	209	174	246	2677	33333
7 31-31	92	54	31	90	100	45	121	126	97	55	61	80	952	34285*
TOTAL	642	519	1647	2914	3242	4194	5101	4544	4773	3423	2040	1246	34285*	

* Total count may differ from total fish targets by bank because of method used to average for debris.

Appendix Table 38. Crescent River south bank side-scan sonar counts by hour, 1 July through 31 July 1983.

	HOUR																							
DATE	1	2	3	4	5	6	7	8	9	10	11	12	13	14	15	16	17	18	19	20	21	22	23	24
7 1	0	0	0	0	0	0	0	0	0	0	0	0	0	0	0	0	0	0	0	0	0	0	0	0
7 2	0	0	0	0	0	0	0	0	0	0	0	0	0	0	0	0	0	0	0	0	0	0	0	0
7 3	2	0	0	1	0	1	0	0	0	0	0	0	3	0	4	1	1	0	0	0	2	0	0	1
7 4	2	0	1	2	1	0	0	3	0	0	0	0	1	3	6	4	4	21	9	18	5	1	0	0
7 5	0	0	0	0	0	0	0	0	0	3	5	8	72	94	79	195	112	127	35	58	51	90	22	6
7 6	3	5	2	5	15	2	30	30	30	30	5	8	9	11	27	31	133	119	52	63	46	24	12	38
7 7	24	3	5	15	15	6	8	8	4	14	21	25	31	84	121	149	217	180	176	116	86	18	10	7
7 8	6	7	2	2	11	51	55	33	60	65	75	142	145	118	114	221	186	152	111	32	25	9	8	3
7 9	6	3	2	0	6	33	52	37	55	131	107	118	117	140	105	107	68	107	71	67	25	27	9	6
7 10	2	4	3	3	9	24	22	28	20	16	45	40	104	90	155	124	134	218	174	70	25	17	5	7
7 11	8	6	4	4	9	61	20	16	12	12	31	51	47	116	128	278	301	264	150	167	125	49	12	10
7 12	18	16	18	1	9	16	16	36	52	90	187	297	198	196	141	223	112	234	138	103	51	24	23	13
7 13	6	6	0	3	4	19	22	31	43	125	128	235	420	379	387	144	199	364	374	240	121	83	23	19
7 14	7	6	4	7	58	141	197	469	330	371	313	204	78	158	347	390	230	140	90	104	60	51	77	20
7 15	8	15	15	11	109	111	159	112	267	284	257	201	205	208	180	136	45	65	39	147	197	52	17	6
7 16	8	0	5	9	74	28	54	153	168	147	195	236	89	82	147	147	152	113	108	101	32	40	18	28
7 17	17	7	7	15	34	44	42	187	140	117	165	94	95	87	86	64	45	55	36	33	87	32	36	31
7 18	30	17	11	7	45	57	53	151	168	235	235	147	56	220	213	126	123	103	86	93	86	112	71	14
7 19	11	23	3	14	23	97	125	263	190	255	336	190	124	147	227	139	377	227	121	197	161	45	20	23
7 20	32	15	5	6	15	91	134	166	144	276	189	259	228	178	179	292	152	234	218	123	67	62	49	28
7 21	19	18	16	14	43	66	86	179	223	260	229	114	153	135	117	24	165	175	150	125	61	100	62	27
7 22	24	19	5	4	29	73	104	155	105	66	45	88	206	207	95	137	134	103	169	51	91	81	51	36
7 23	33	34	27	11	17	28	24	72	138	121	81	91	91	55	140	81	100	120	84	77	122	164	134	43
7 24	16	7	9	12	23	53	83	56	53	152	156	146	177	63	36	115	117	134	85	81	57	18	15	21
7 25	15	11	6	10	7	25	35	27	39	125	139	129	213	122	60	83	82	67	63	82	68	51	37	32
7 26	39	47	39	20	19	63	37	47	34	86	49	83	119	82	51	36	55	34	84	101	84	72	60	43
7 27	29	49	35	19	24	18	51	19	53	39	81	87	56	55	104	70	73	88	47	76	111	71	51	43
7 28	36	41	28	11	16	28	45	16	39	48	40	80	59	56	35	43	41	40	60	83	86	92	58	65
7 29	55	39	43	28	15	31	20	17	35	77	63	48	69	70	70	56	70	108	84	56	57	56	62	34
7 30	28	37	21	20	21	47	58	123	146	95	119	95	82	70	110	101	73	70	111	96	108	144	94	86
7 31	86	76	62	22	28	54	56	96	96	118	89	69	52	59	80	90	81	97	96	84	101	61	79	70

Appendix Table 39. Crescent River south bank side-scan sonar counts by hour, three day time periods, 1 July through 31 July 1983.

DATE	HOUR 1-2	3-4	5-6	7-8	9-10	11-12	13-14	15-16	17-18	19-20	21-22	23-24	TOTAL	CUMULATIVE TOTAL
7 1- 3	2	1	1	0	0	0	3	5	1	0	2	1	16	16
7 4- 6	10	10	18	63	63	26	190	342	516	235	217	78	1768	1784
7 7- 9	49	26	122	193	329	488	635	817	910	573	190	43	4375	6159
7 10-12	54	33	128	138	202	651	751	1049	1263	802	291	70	5432	11591
7 13-15	48	40	442	990	1420	1338	1448	1584	1043	994	564	162	10073	21664
7 16-18	79	54	282	640	975	1072	629	783	591	457	389	198	6149	27813
7 19-21	118	58	335	953	1348	1317	965	978	1330	934	496	209	9041	36854
7 22-24	133	68	223	494	635	607	799	604	708	547	533	300	5651	42505
7 25-27	190	129	156	216	376	568	647	404	399	453	457	266	4261	46766
7 28-30	236	151	158	279	440	445	406	415	402	490	543	399	4364	51130
7 31-31	162	84	82	152	214	158	111	170	178	180	162	149	1802	52932*
TOTAL	1081	654	1947	4118	6002	6670	6584	7151	7341	5665	3844	1875	52932*	

* Total count may differ from total fish targets by bank because of method used to average for debris.

Appendix Table 40. Total number of fish targets and estimated species composition recorded by north bank, sonar in the Crescent River, 1 July through 31 July 1983.

Date Mo Day	Fish Targets	Accum	Number of Fish Sockeye	Accum	Pink	Accum
7/ 1	2	2	2	2	0	0
7/ 2	0	2	0	2	0	0
7/ 3	11	13	11	13	0	0
7/ 4	71	84	71	84	0	0
7/ 5	564	648	561	645	3	3
7/ 6	1322	1970	1314	1959	8	11
7/ 7	1127	3097	1120	3079	7	18
7/ 8	1222	4319	1215	4294	7	25
7/ 9	363	4682	361	4655	2	27
7/10	427	5109	424	5079	3	30
7/11	874	5983	869	5948	5	35
7/12	1565	7548	1555	7503	10	45
7/13	2037	9585	2025	9528	12	57
7/14	2822	12407	2805	12333	17	74
7/15	2091	14498	2078	14411	13	87
7/16	1517	16015	1508	15919	9	96
7/17	821	16836	816	16735	5	101
7/18	1383	18219	1375	18110	8	109
7/19	2224	20443	2210	20320	14	123
7/20	2178	22621	2165	22485	13	136
7/21	2094	24715	2083	24568	11	147
7/22	1135	25850	1129	25697	6	153
7/23	918	26768	913	26610	5	158
7/24	1266	28034	1259	27869	7	165
7/25	605	28639	602	28471	3	168
7/26	943	29582	934	29405	9	177
7/27	1045	30627	1035	30440	10	187
7/28	669	31296	663	31103	6	193
7/29	813	32109	805	31908	8	201
7/30	1195	33304	1184	33092	11	212
7/31	954	34258	945	34037	9	221
Total	34258		34037		221	

* Sonar counts apportioned by fish wheel counts.
Round-off error estimated(worst case) +/- 1 fish per day.

Appendix Table 41. Total number of fish targets and estimated species composition recorded by south bank, sonar in the Crescent River, 1 July through 31 July 1983.

Date Mo Day	Fish Targets	Accum	Number of Fish Sockeye	Accum	Pink	Accum
7/ 1	10	10	10	10	0	0
7/ 2	14	24	14	24	0	0
7/ 3	17	41	17	41	0	0
7/ 4	81	122	81	122	0	0
7/ 5	957	1079	957	1079	0	0
7/ 6	720	1799	720	1799	0	0
7/ 7	1342	3141	1342	3141	0	0
7/ 8	1634	4775	1634	4775	0	0
7/ 9	1399	6174	1399	6174	0	0
7/10	1339	7513	1339	7513	0	0
7/11	1880	9393	1880	9393	0	0
7/12	2215	11608	2215	11608	0	0
7/13	3371	14979	3371	14979	0	0
7/14	3852	18831	3852	18831	0	0
7/15	2845	21676	2845	21676	0	0
7/16	2133	23809	2133	23809	0	0
7/17	1566	25375	1566	25375	0	0
7/18	2459	27834	2459	27834	0	0
7/19	3339	31173	3339	31173	0	0
7/20	3142	34315	3142	34315	0	0
7/21	2561	36876	2561	36876	0	0
7/22	2097	38973	2097	38973	0	0
7/23	1888	40861	1888	40861	0	0
7/24	1685	42546	1685	42546	0	0
7/25	1529	44075	1529	44075	0	0
7/26	1384	45459	1384	45459	0	0
7/27	1349	46808	1349	46808	0	0
7/28	1145	47953	1145	47953	0	0
7/29	1262	49215	1262	49215	0	0
7/30	1955	51170	1955	51170	0	0
7/31	1803	52973	1803	52973	0	0
Total	52973		52973		0	

* Sonar counts apportioned by fish wheel counts.
Round-off error estimated(worst case) +/- 1 fish per day.

Appendix Table 42. Daily fishwheel and seine catch by species from the Crescent River, 9 July through 27 July 1983[1].

Date	Fishwheel Hours Open	Fishwheel Sockeye	Fishwheel Pink	Seine[2] Sockeye
7/09	13.5	0		
7/10	19.0	0		
7/11	22.0	4		
7/12	23.0	16		
7/13	22.75	33		
7/14	24.0	18		
7/15	22.5	12		
7/16	23.75	18		
7/17	21.25	14		
7/18	21.25	15		
7/19	13.75	28		
7/20	13.5	43	2	
7/21	21.25	18	1	
7/22	15.5	14		41
7/23	22.75	11		108
7/24	23.25	6		29
7/25	25.75	13	1	128
7/26	24.75	11		136
7/27	23.0	10	2	60
Total		284	6	502

[1] Fishwheel catch adjusted for 24 hours: $\frac{\text{daily catch} \times 24 \text{ hours}}{\text{hours open}}$

[2] Seine operated 22 July through 27 July.

Appendix Table 43. Length composition of the major age classes of sockeye salmon collected in the Crescent River, 1979-1983.

		Male			Female			Total			
Year	Age Class	Average Length (mm)[1]	Standard Error	Sample Size	Average Length (mm)	Standard Error	Sample Size	Average Length (mm)	Standard Error	Sample Size	Ratio Male-Female
1979	1.2	509	6.2	92	523	4.5	86	516	3.9	178	1.1:1
1980		459	12.4	17	494	13.5	4	466	--	21	4.3:1
1981		472	6.3	47	471	7.2	31	472	--	78	1.5:1
1982		522	8.6	59	491	8.6	33	511	8.6	92	1.8:1
1983		467	6.1	47	487	6.5	25	474	4.6	72	1.9:1
1979	1.3	585	3.0	184	572	1.2	274	578	1.4	458	0.7:1
1980		568	2.1	167	549	1.5	223	557	--	390	0.7:1
1981		576	2.5	121	555	2.6	172	564	--	293	0.7:1
1982		586	1.4	303	556	1.4	259	572	1.4	562	1.2:1
1983		570	2.1	111	542	1.8	169	553	1.3	280	0.7:1
1980	2.2	497	10.0	9	493	6.3	9	495	--	18	1.0:1
1981		487	55.0	40	519	4.5	57	506	--	97	0.7:1
1983		494	3.9	93	488	3.0	89	491	2.5	182	1.0:1

Appendix Table 43. Length composition of the major age classes of sockeye salmon collected in the Crescent River, 1979-1983 (continued).

		Male			Female			Total			
Year	Age Class	Average Length (mm)	Standard Error	Sample Size	Average Length (mm)	Standard Error	Sample Size	Average Length (mm)	Standard Error	Sample Size	Ratio Male-Female
1980	2.3	556	7.9	30	546	3.2	36	551	--	66	0.8:1
1981		584	2.0	158	554	1.6	237	566	--	395	0.7:1
1982		592	4.3	22	555	3.3	28	571	3.8	50	0.8:1
1983		569	3.5	43	550	2.1	80	556	1.8	123	0.5:1

Lengths measured from mid-eye to fork of tail.

Appendix Table 44. Weight composition of the major age classes of sockeye salmon collected in the Crescent River, 1980-1983.

		Male			Female			Total		
Year	Age Class	Average Weight (kg)	Standard Error	Sample Size	Average Weight (kg)	Standard Error	Sample Size	Average Weight (kg)	Standard Error	Sample Size
1981	1.2	2.0	0.1	47	1.8	0.09	31	2.0	--	78
1982		2.7	0.15	59	2.0	0.11	33	2.5	0.13	92
1983		1.8	0.08	47	2.0	0.09	25	1.9	0.06	72
1980	1.3	3.1	0.07	59	2.7	0.04	91	2.9	--	150
1981		3.5	0.05	121	2.9	0.04	172	3.2	--	293
1982		3.7	0.03	303	2.9	0.02	258	3.3	0.03	561
1983		3.3	0.04	111	2.7	0.03	169	2.9	0.02	280
1981	2.2	2.4	0.13	40	2.5	0.07	57	2.4	--	97
1983		2.3	0.06	93	2.0	0.03	89	2.1	0.04	182
1980	2.3	3.1	0.15	27	2.6	0.05	32	2.9	--	59
1981		3.7	0.04	158	2.9	0.03	237	3.2	--	395
1982		3.9	0.12	22	2.9	0.06	28	3.3	0.09	50
1983		3.2	0.06	43	2.8	0.03	80	2.9	0.03	123

Appendix Table 45. Total number of fish targets and estimated species composition recorded by side scan sonar in the Susitna River at Susitna Station, 1 July through 8 August, 1983*.

Date		Fish		Number of Fish									
No	Day	Targets	Accum.	Sockeye	Accum	Pink	Accum	Chum	Accum	Coho	Accum	King	Accum
7/ 1		39	39	18	18	13	13	3	3	1	1	3	3
7/ 2		85	124	39	57	30	43	7	10	3	4	7	10
7/ 3		73	197	35	92	23	66	6	16	2	6	5	15
7/ 4		130	327	70	162	35	101	10	26	6	12	9	24
7/ 5		172	499	92	254	46	147	13	39	8	20	12	36
7/ 6		154	653	81	335	44	191	12	51	7	27	11	47
7/ 7		141	794	66	401	47	238	12	63	5	32	11	58
7/ 8		140	934	72	473	41	279	11	74	5	37	9	67
7/ 9		128	1062	66	539	38	317	10	84	5	42	9	76
7/10		150	1212	86	625	36	353	11	95	8	50	9	85
7/11		509	1721	304	929	110	463	36	131	30	80	28	113
7/12		581	2302	364	1293	110	573	39	170	39	119	28	141
7/13		1279	3581	824	2117	221	794	85	255	91	210	59	200
7/14		2789	6370	1874	3991	198	992	275	530	421	631	21	221
7/15		2629	8999	1782	5773	195	1187	227	757	425	1056	0	221
7/16		3932	12931	2765	8538	259	1446	297	1054	613	1669	0	221
7/17		6641	19572	4612	13150	1022	2468	350	1404	646	2315	11	232
7/18		9864	29436	7390	20540	1436	3904	470	1874	539	2854	30	262
7/19		28707	58143	21901	42441	3646	7550	1516	3390	1609	4463	35	297
7/20		20523	78666	17424	59865	1245	8795	933	4323	921	5384	0	297
7/21		11525	90191	8847	68712	897	9692	859	5182	921	6305	0	297
7/22		4115	94306	2571	71283	965	10657	220	5402	359	6664	0	297
7/23		9493	103799	6519	77802	1771	12428	278	5680	882	7546	42	339
7/24		10804	114603	7442	85244	2281	14709	161	5841	868	8414	52	391
7/25		9881	124484	7509	92753	1539	16248	314	6155	519	8933	0	391
7/26		10957	135441	7944	100697	2054	18302	365	6520	594	9527	0	391
7/27		7714	143155	3579	104276	3076	21378	253	6773	781	10308	25	416
7/28		4515	147670	2190	106466	1683	23061	147	6920	483	10791	13	429
7/29		3206	150876	1363	107829	1433	24494	106	7026	291	11082	13	442
7/30		1844	152720	794	108623	831	25325	38	7064	182	11264	0	442
7/31		1142	153862	500	109123	504	25829	24	7088	114	11378	0	442
8/ 1		1301	155163	733	109856	480	26309	23	7111	65	11443	0	442
8/ 2		1057	156220	483	110339	509	26818	15	7126	50	11493	0	442

- Continued -

Appendix Table 45. Total number of fish targets and estimated species composition recorded by side scan sonar in the Susitna River at Susitna Station, 1 July through 8 August, 1983* [cont].

Date	Fish		Number of Fish									
No Day	Targets	Accum	Sockeye	Accum	Pink	Accum	Chum	Accum	Coho	Accum	King	Accum
8/ 3	961	157181	494	110833	405	27223	15	7141	47	11540	0	442
8/ 4	600	157781	241	111074	259	27482	67	7208	29	11569	3	445
8/ 5	625	158406	285	111359	247	27729	60	7268	31	11600	2	447
8/ 6	525	158931	235	111594	210	27939	52	7320	26	11626	2	449
8/ 7	1271	160202	440	112034	602	28541	162	7482	61	11687	7	456
8/ 8	888	161090	280	112314	440	28981	120	7602	42	11729	5	461
Total	161090		112314		28981		7602		11729		461	

* Sonar counts apportioned by fish wheel counts.
Round-off error estimated(worst case) +/- 1 fish per day.

Appendix Table 46. Apportioned sonar counts and Petersen population (tag-recapture) estimates by species and sampling location, Adult Anadromous Investigations, Susitna Hydroelectric Studies, 1983 [1].

Location	Estimate Type	Escapement Estimate				
		Sockeye	Pink	Chum	Coho	Chinook
Yentna Station	Sonar	104,400	60,700	10,800	8,900	--
Sunshine Station	Tag/recap	71,700	40,600	266,000	15,200	91,200
Talkeetna Station	Tag/recap	4,200	9,500	50,400	2,400	14,500
Curry Station	Tag/recap	1,900	5,500	21,100	800	10,000

[1] Source, ADF&G 1984.

Appendix Table 47. Susitna River (Susitna Station) west bank side-scan sonar counts by sector, 1 July through 8 August 1983.

DATE	SECTOR 1	2	3	4	5	6	7	8	9	10	11	12	TOTAL
7 1	0	0	0	0	2	0	0	0	0	1	0	0	3
7 2	0	0	0	0	0	0	1	0	0	0	4	0	5
7 3	0	0	1	0	0	0	0	0	0	1	5	3	10
7 4	18	1	0	0	0	0	0	1	3	3	5	4	35
7 5	15	6	2	0	0	0	1	2	0	11	1	12	50
7 6	19	0	0	0	0	0	0	2	3	5	5	5	39
7 7	0	0	4	1	0	0	0	0	0	1	1	3	10
7 8	15	2	2	0	0	0	1	4	4	3	0	3	34
7 9	7	1	1	0	0	0	2	4	0	2	4	1	22
7 10	10	6	0	0	0	1	1	3	4	8	12	5	50
7 11	41	12	1	0	0	2	11	30	34	26	39	24	220
7 12	67	17	8	9	8	7	17	13	38	34	35	46	299
7 13	202	65	19	3	3	2	24	40	71	90	108	97	724
7 14	242	61	33	29	26	26	114	177	184	200	201	146	1439
7 15	349	36	21	12	11	7	51	84	86	226	139	133	1155
7 16	280	167	36	25	23	20	168	248	256	274	263	260	2020
7 17	1838	419	47	19	19	7	168	346	360	458	393	422	4496
7 18	3310	627	56	50	12	13	177	407	457	543	430	396	6478
7 19	7666	2937	1170	1047	1025	1010	415	624	490	613	643	533	18173
7 20	8285	2874	573	333	298	278	286	412	499	719	712	713	15982
7 21	4365	1294	313	166	160	146	187	318	334	565	634	489	8971
7 22	1658	408	93	27	19	16	10	16	34	91	80	36	2488
7 23	2886	1161	273	200	198	144	153	161	200	486	539	314	6715
7 24	3620	918	98	80	127	18	269	521	438	1020	1010	573	8692
7 25	2876	809	59	21	67	7	264	375	463	821	1187	967	7916
7 26	2482	1171	191	165	175	155	312	380	395	821	1037	811	8095
7 27	1119	694	108	88	79	69	179	223	282	638	781	527	4787

- Continued -

Appendix Table 47. Susitna River (Susitna Station) west bank side-scan sonar counts by sector, 1 July through 8 August 1983 [continued].

	SECTOR												
DATE	1	2	3	4	5	6	7	8	9	10	11	12	TOTAL
7 28	120	389	174	41	15	5	114	128	307	653	627	468	3041
7 29	72	276	74	9	11	5	85	75	192	367	266	246	1678
7 30	333	143	34	6	6	5	16	41	57	207	138	62	1048
7 31	237	75	17	3	4	4	15	12	42	128	79	43	659
8 1	323	133	40	7	0	0	19	18	48	158	128	46	920
8 2	48	108	30	9	0	2	17	11	44	98	81	96	544
8 3	363	93	21	2	0	0	0	13	16	43	25	4	580
8 4	24	106	12	3	0	1	0	2	8	43	27	5	231
8 5	243	55	6	0	0	0	0	0	0	1	0	0	305
8 6	179	41	5	0	0	0	0	0	0	0	0	0	225
8 7	163	32	11	5	6	4	10	12	11	32	34	38	358
8 8	62	14	7	8	3	1	14	2	10	18	18	41	198
TOTAL	43537	15151	3540	2368	2297	1955	3101	4705	5370	9408	9691	7572	108695*

* Total count may differ from total fish targets by bank because of method used to average for debris.

Appendix Table 48. Susitna River (Susitna Station) west bank side-scan sonar counts by sector, four day time periods, 1 July through 8 August 1983.

DATE	SECTOR 1	2	3	4	5	6	7	8	9	10	11	12	TOTAL	CUMULATIVE TOTAL
7 1- 4	18	1	1	0	2	0	1	1	3	5	14	7	53	53
7 5- 8	49	8	8	1	0	0	2	8	7	20	7	23	133	186
7 9-12	125	36	10	9	8	10	31	50	76	70	90	76	591	777
7 13-16	1073	329	109	69	63	55	357	549	597	790	711	636	5338	6115
7 17-20	21099	6857	1846	1449	1354	1308	1046	1789	1806	2333	2178	2064	45129	51244
7 21-24	12529	3781	777	473	504	324	619	1016	1006	2162	2263	1412	26866	78110
7 25-28	6597	3063	532	315	336	236	869	1106	1447	2933	3632	2773	23839	101949
7 29- 1	965	627	165	25	21	14	135	146	339	860	611	397	4305	106254
8 2- 5	678	362	69	14	0	3	17	26	68	185	133	105	1660	107914
8 6- 8	404	87	23	13	9	5	24	14	21	50	52	79	781	108695*
TOTAL	43537	15151	3540	2368	2297	1955	3101	4705	5370	9408	9691	7572	108695*	

* Total count may differ from total fish targets by bank because of method used to average for debris.

Appendix Table 49. Susitna River (Susitna Station) east bank side-scan sonar counts by sector, 1 July through 8 August 1983.

DATE	SECTOR 1	2	3	4	5	6	7	8	9	10	11	12	TOTAL
7 1	0	0	4	2	0	0	1	1	2	3	4	13	30
7 2	0	0	13	3	0	2	3	3	4	9	15	19	71
7 3	0	0	10	5	0	0	4	2	2	6	11	15	55
7 4	14	24	8	0	3	0	1	7	5	13	7	13	95
7 5	28	34	16	9	0	1	1	3	3	7	12	14	128
7 6	26	21	7	5	2	0	3	8	3	14	13	5	107
7 7	42	58	14	4	1	0	1	2	1	6	11	3	143
7 8	38	26	18	1	0	0	1	1	5	9	10	8	117
7 9	25	21	15	1	0	1	1	7	5	9	9	11	105
7 10	22	24	12	2	1	1	5	4	6	3	6	9	95
7 11	40	23	13	9	0	2	15	9	21	37	34	28	231
7 12	43	29	21	6	3	2	8	18	23	20	25	45	243
7 13	96	27	26	6	3	2	24	24	34	78	101	133	554
7 14	197	144	103	26	17	6	90	80	121	154	160	250	1348
7 15	94	104	141	26	12	6	65	49	80	142	106	135	960
7 16	141	94	131	39	43	54	65	72	96	162	148	198	1243
7 17	92	61	82	26	44	33	88	88	140	210	182	346	1392
7 18	107	153	158	27	26	8	190	187	222	356	296	487	2217
7 19	335	518	954	247	146	41	408	377	421	628	534	1958	6567
7 20	267	192	220	93	53	34	203	220	264	397	379	621	2943
7 21	343	97	113	31	20	21	116	106	120	145	188	374	1674
7 22	284	82	85	23	26	30	69	79	100	130	119	190	1217
7 23	312	113	119	48	57	36	101	117	130	170	169	278	1650
7 24	244	128	188	77	42	27	93	89	72	117	142	243	1462
7 25	172	190	139	58	50	23	75	95	72	137	153	242	1406
7 26	221	130	141	75	46	30	69	141	98	103	139	241	1434
7 27	193	198	131	86	43	42	61	89	81	160	161	215	1460

-Continued-

Appendix Table 49. Susitna River (Susitna Station) east bank side-scan sonar counts by sector, 1 July through 8 August 1983 [continued].

	SECTOR												
DATE	1	2	3	4	5	6	7	8	9	10	11	12	TOTAL
7 28	194	161	76	46	41	25	70	83	47	86	157	120	1106
7 29	168	164	91	30	9	6	37	34	47	94	105	238	1023
7 30	48	98	55	18	8	5	26	31	29	58	85	80	541
7 31	36	52	44	11	5	1	12	8	7	37	43	62	318
8 1	35	39	36	14	7	1	10	5	14	11	20	31	223
8 2	42	66	53	21	8	0	11	13	25	40	22	53	354
8 3	37	51	31	19	5	2	8	12	10	16	16	44	251
8 4	56	22	37	8	5	4	22	14	11	19	16	36	250
8 5	33	27	38	9	1	0	3	7	2	21	27	46	214
8 6	24	19	15	9	2	0	5	11	17	30	11	43	186
8 7	20	49	45	21	10	8	46	41	71	96	93	114	614
8 8	56	40	41	8	3	2	32	25	60	75	82	66	490
TOTAL	4125	3279	3444	1149	742	456	2043	2162	2471	3808	3811	7027	34517*

* Total count may differ from total fish targets by bank because of method used to average for debris.

Appendix Table 50. Susitna River (Susitna Station) east bank side-scan sonar count by sector, four day time periods, 1 July through 8 August 1983.

DATE	SECTOR 1	2	3	4	5	6	7	8	9	10	11	12	TOTAL	CUMULATIVE TOTAL
7 1- 4	14	24	35	10	3	2	9	13	13	31	37	60	251	251
7 5- 8	134	139	55	19	3	1	6	14	12	36	46	30	495	746
7 9-12	130	97	61	18	4	6	29	38	55	69	74	93	674	1420
7 13-16	528	369	401	97	75	68	244	225	331	536	515	716	4105	5525
7 17-20	801	924	1414	393	269	116	889	872	1047	1591	1391	3412	13119	18644
7 21-24	1183	420	505	179	145	114	379	391	422	562	618	1085	6003	24647
7 25-28	780	679	487	265	180	120	275	408	298	486	610	818	5406	30053
7 29- 1	287	353	226	73	29	13	85	78	97	200	253	411	2105	32158
8 2- 5	168	166	159	57	19	6	44	46	48	96	81	179	1069	33227
8 6- 8	100	108	101	38	15	10	83	77	148	201	186	223	1290	34517*
TOTAL	4125	3279	3444	1149	742	456	2043	2162	2471	3808	3811	7027	34517*	

* Total count may differ from total fish targets by bank because of method used to average for debris.

Appendix Table 51. Susitna River (Susitna Station) west bank side-scan sonar counts by hour, 1 July through 8 August 1983.

	HOUR																							
DATE	1	2	3	4	5	6	7	8	9	10	11	12	13	14	15	16	17	18	19	20	21	22	23	24
7 1	0	1	2	0	0	0	0	0	0	0	0	0	0	0	0	0	0	0	0	0	0	0	0	0
7 2	0	1	0	0	0	0	0	0	0	0	3	1	0	0	0	0	0	0	0	0	0	0	0	0
7 3	1	0	0	0	0	0	0	2	0	1	0	0	0	0	0	2	3	0	0	0	0	0	1	0
7 4	0	0	0	0	3	0	1	3	0	0	0	0	1	0	2	4	1	4	4	3	0	2	2	5
7 5	2	6	7	1	0	1	1	6	2	2	1	2	1	3	3	2	1	2	1	0	0	5	1	0
7 6	3	2	0	0	3	0	1	0	0	0	0	1	3	3	2	4	1	3	2	2	0	5	0	4
7 7	0	0	1	0	1	0	3	0	0	0	0	0	0	0	1	0	0	0	1	2	0	0	1	0
7 8	0	2	0	0	0	0	0	4	0	1	0	1	2	2	0	0	6	2	1	0	1	2	1	9
7 9	1	1	1	0	0	0	0	0	3	1	1	3	0	0	2	2	1	0	3	2	0	0	1	0
7 10	0	1	0	4	1	0	0	0	0	0	0	3	1	2	0	2	0	0	7	2	2	10	7	8
7 11	4	3	7	10	7	3	7	11	7	13	8	3	7	3	13	12	4	10	13	18	12	13	20	12
7 12	11	23	28	23	22	17	9	8	8	6	12	12	12	12	12	12	4	6	5	21	9	12	2	13
7 13	3	12	20	15	14	21	22	17	24	16	20	27	20	38	41	22	58	47	56	94	52	30	25	30
7 14	60	60	60	60	60	60	60	60	22	51	64	34	45	83	35	64	72	69	71	103	70	68	50	58
7 15	52	34	39	25	28	34	77	59	22	14	54	49	45	24	46	43	56	25	78	92	74	67	54	64
7 16	90	59	46	41	52	28	42	54	74	74	41	26	84	84	84	97	126	132	136	140	146	127	126	111
7 17	294	188	167	161	132	164	125	150	181	205	154	178	181	177	140	200	219	182	203	175	230	211	237	242
7 18	181	174	234	167	192	149	127	156	209	187	235	254	279	300	437	276	325	421	363	298	364	344	411	395
7 19	466	547	732	732	732	732	732	732	789	859	834	704	716	682	621	851	1058	1094	1078	732	732	732	732	552
7 20	442	403	574	804	737	549	503	503	694	614	666	666	822	960	1018	989	646	634	723	412	678	653	666	626
7 21	518	356	421	474	491	491	463	338	408	384	417	394	449	384	384	420	364	359	262	269	253	278	237	157
7 22	130	76	90	119	78	132	110	78	55	59	50	109	78	102	113	138	117	170	165	90	102	71	133	123
7 23	146	154	164	218	284	317	359	204	285	421	210	210	210	411	210	361	345	293	325	294	290	362	329	313
7 24	119	265	261	262	312	116	387	302	441	321	151	219	364	367	388	457	529	400	459	380	168	176	368	456
7 25	505	159	171	397	176	223	319	388	501	455	251	312	265	245	384	212	225	253	311	305	407	335	315	402
7 26	420	402	198	472	426	342	368	451	304	212	116	136	116	136	336	424	408	252	160	266	267	294	144	205
7 27	150	199	259	199	222	191	244	232	246	213	173	184	108	100	78	187	178	188	196	198	198	198	140	504
7 28	180	185	144	151	84	128	176	118	143	84	122	111	134	84	98	98	127	151	126	164	141	97	109	84
7 29	88	51	84	80	47	101	90	69	54	65	52	37	54	72	38	65	76	83	96	98	62	62	69	83
7 30	61	61	44	56	59	44	11	21	17	44	11	52	48	50	43	37	38	18	29	44	54	49	54	19
7 31	14	25	13	21	26	23	29	51	20	40	13	7	6	17	24	33	44	14	35	19	24	42	32	47
8 1	39	30	52	36	39	23	33	19	36	34	67	28	16	36	24	30	33	45	51	56	57	58	46	32
8 2	47	15	23	15	20	13	14	25	33	21	25	18	18	13	18	14	18	34	31	18	34	12	45	20
8 3	21	18	11	12	31	22	11	10	11	33	29	7	25	18	24	23	22	28	10	37	37	43	41	36
8 4	8	11	7	8	9	5	11	12	20	7	17	16	15	23	7	5	4	16	11	5	7	4	1	2
8 5	13	9	13	6	10	13	16	17	6	12	12	5	18	19	19	11	18	20	20	5	2	7	21	13
8 6	6	7	4	13	10	19	13	15	4	7	15	4	14	9	12	4	6	3	6	9	15	16	4	10
8 7	8	11	17	11	18	15	15	9	18	3	18	18	21	23	16	10	12	17	16	14	12	13	34	9
8 8	15	6	20	10	9	11	5	3	6	14	12	12	6	16	7	15	2	3	8	9	2	5	1	1

Appendix Table 52. Susitna River (Susitna Station) west bank side-scan sonar counts by hour, four day time periods, 1 July through 8 August 1983.

DATE	HOUR 1-2	3-4	5-6	7-8	9-10	11-12	13-14	15-16	17-18	19-20	21-22	23-24	TOTAL	CUMULATIVE TOTAL
7 1- 4	3	2	3	6	1	4	1	8	8	7	2	8	53	53
7 5- 8	15	9	5	15	5	5	14	12	15	9	13	16	133	186
7 9-12	44	73	50	35	38	42	37	55	25	71	58	63	591	777
7 13-16	370	306	297	391	297	315	423	432	585	770	634	518	5338	6115
7 17-20	2697	3571	3387	3028	3738	3691	4117	4532	4579	3984	3944	3861	45129	51244
7 21-24	1984	2011	2421	2241	2376	1960	2365	2471	2577	2244	2100	2116	26866	78110
7 25-28	2400	2391	1792	2296	2158	1825	1608	1817	1784	1928	1937	1903	23839	101949
7 29- 1	393	384	362	347	330	287	299	294	371	448	408	382	4305	106254
8 2- 5	162	95	123	116	143	129	149	121	160	137	146	179	1660	107914
8 6- 8	53	75	82	60	52	79	89	64	43	62	63	59	781	108695*
TOTAL	8121	8917	8522	8535	9138	8337	9102	9806	10147	9660	9305	9105	108695*	

* Total count may differ from total fish targets by bank because of method used to average for debris.

Appendix Table 53. Susitna River (Susitna Station) east bank side-scan sonar counts by hour, 1 July through 8 August 1983.

	HOUR																							
DATE	1	2	3	4	5	6	7	8	9	10	11	12	13	14	15	16	17	18	19	20	21	22	23	24
7 1	2	1	0	0	0	1	0	3	1	0	3	1	0	3	1	0	6	1	0	0	1	2	1	3
7 2	4	1	4	1	4	1	4	7	1	5	4	1	3	3	4	1	4	3	3	1	4	2	3	3
7 3	1	5	7	2	0	0	1	2	2	1	2	6	0	0	4	0	4	1	3	6	2	1	3	2
7 4	3	0	4	2	3	1	6	3	1	9	7	4	5	2	10	3	5	5	3	4	3	6	3	3
7 5	4	3	9	0	11	9	3	6	8	7	1	5	4	5	1	6	8	2	10	3	7	9	1	6
7 6	4	3	5	5	7	5	11	2	9	2	5	1	7	2	4	3	6	5	6	3	5	4	3	3
7 7	7	6	4	3	4	8	3	4	3	5	6	8	4	2	6	3	1	7	12	8	9	10	16	4
7 8	6	1	10	5	4	5	7	8	3	2	3	13	4	5	6	5	2	8	2	6	4	3	0	5
7 9	3	3	10	6	9	2	4	1	3	5	5	6	4	6	6	2	8	7	2	1	2	7	1	2
7 10	3	9	1	6	10	3	1	2	7	0	4	0	8	2	0	0	4	0	6	1	13	3	5	7
7 11	5	8	8	8	6	10	7	7	5	4	10	10	8	10	17	11	16	3	10	8	15	25	10	10
7 12	16	7	25	8	2	6	16	9	16	5	10	6	11	12	23	3	2	4	15	12	1	12	9	13
7 13	8	10	11	13	18	16	24	13	28	24	23	12	18	22	17	21	16	43	24	13	33	17	73	57
7 14	56	60	71	80	56	107	70	58	65	41	54	55	57	53	46	31	50	32	50	77	29	33	36	81
7 15	36	51	47	60	30	57	75	59	37	54	23	17	24	15	17	32	42	45	34	38	20	35	53	59
7 16	61	63	27	27	26	40	25	27	40	38	66	57	53	23	57	34	45	53	98	50	52	127	74	80
7 17	63	62	63	61	61	74	77	60	59	61	69	55	49	88	48	57	61	64	44	60	20	49	49	56
7 18	81	71	44	60	61	61	78	80	105	89	97	101	94	144	113	141	178	76	68	109	79	80	109	151
7 19	156	204	257	169	179	200	184	268	251	285	229	261	101	158	324	281	211	104	219	297	621	616	184	160
7 20	251	186	211	175	178	141	135	79	121	113	126	97	132	65	92	120	124	80	84	95	50	126	66	91
7 21	95	64	75	71	47	73	116	121	60	54	66	96	80	73	101	66	54	82	59	36	50	32	51	52
7 22	42	35	41	60	97	51	51	32	35	31	78	54	54	54	44	52	26	45	33	50	54	62	80	56
7 23	67	72	74	55	59	73	102	52	48	68	72	55	98	48	72	62	74	71	52	53	72	63	121	67
7 24	51	60	91	119	69	81	60	74	65	57	36	44	38	60	73	70	51	61	57	38	50	52	46	39
7 25	92	55	61	50	50	46	57	67	70	46	54	63	21	49	36	54	89	69	47	102	65	72	42	49
7 26	99	58	48	55	25	38	67	55	44	47	66	100	110	70	35	60	37	54	95	83	39	35	60	54
7 27	132	53	47	60	75	77	60	110	48	64	60	60	34	30	37	53	62	49	39	72	62	62	58	56
7 28	38	45	45	48	41	62	57	56	78	54	48	127	36	49	46	48	47	34	36	14	14	27	30	26
7 29	40	16	56	41	22	29	53	69	21	52	52	59	26	28	48	31	29	34	29	94	29	33	107	21
7 30	11	12	19	19	17	38	15	24	17	17	18	24	23	18	21	32	12	22	26	29	15	26	27	19
7 31	12	16	23	9	19	16	25	11	17	26	10	12	26	15	9	7	5	3	3	9	16	11	11	7
8 1	6	11	6	7	6	11	3	10	6	8	7	6	12	4	8	11	3	10	9	12	19	15	25	8
8 2	5	19	10	8	16	11	16	14	7	12	29	16	21	11	10	10	16	28	19	20	10	6	29	9
8 3	15	5	8	8	16	17	9	16	7	9	13	16	7	14	4	17	11	9	11	9	13	3	5	9
8 4	17	5	18	5	6	9	11	9	13	2	10	9	15	12	12	22	11	10	7	13	14	2	5	13
8 5	3	6	4	10	16	16	6	9	3	7	15	6	0	5	7	4	18	15	20	12	7	9	7	9
8 6	7	3	9	4	7	2	5	7	11	5	6	13	3	8	7	11	8	6	8	5	6	21	11	13
8 7	10	15	27	28	26	16	29	29	26	24	28	24	24	32	38	23	46	35	12	16	36	25	24	21
8 8	27	26	31	22	18	19	5	32	30	11	13	18	13	17	23	18	19	27	22	13	17	35	7	27

Appendix Table 54. Susitna River (Susitna Station) east bank side-scan sonar counts by hour, four day time periods, 1 July through 8 August 1983.

DATE	HOUR 1-2	3-4	5-6	7-8	9-10	11-12	13-14	15-16	17-18	19-20	21-22	23-24	TOTAL	CUMULATIVE TOTAL
7 1- 4	17	20	10	26	20	28	16	23	29	20	21	21	251	251
7 5- 8	34	41	53	44	39	42	33	34	39	50	48	38	495	746
7 9-12	54	72	48	47	45	51	61	62	44	55	78	57	674	1420
7 13-16	345	336	350	351	327	307	265	255	326	384	346	513	4105	5525
7 17-20	1076	1060	955	961	1084	1030	1233	1178	1052	996	1643	866	13134	18659
7 21-24	486	606	550	608	418	501	505	540	464	378	435	512	6003	24662
7 25-28	572	414	414	529	451	578	399	369	441	488	376	375	5406	30068
7 29- 1	164	184	158	210	164	188	152	167	118	211	164	225	2105	32173
8 2- 5	75	71	109	90	60	114	85	86	118	111	64	86	1069	33242
8 6- 8	88	121	88	107	107	102	97	120	141	76	140	103	1290	34532
TOTAL	2911	2925	2735	2973	2715	2941	2846	2834	2772	2769	3315	2796	34532	

Appendix Table 55. Total number of fish targets and estimated species composition recorded by west bank sonar in the Susitna River at Susitna Station, 1 July through 8 August 1983.

Date Mo Day	Fish Targets	Accum	Number of Fish Sockeye	Accum	Pink	Accum	Chum	Accum	Coho	Accum	King	Accum
7/ 1	4	4	3	3	0	0	0	0	0	0	0	0
7/ 2	5	9	4	7	0	0	0	0	1	1	0	0
7/ 3	10	19	8	15	0	0	1	1	1	2	0	0
7/ 4	37	56	30	45	1	1	2	3	4	6	1	1
7/ 5	49	105	39	84	1	2	2	5	5	11	1	2
7/ 6	39	144	31	115	1	3	2	7	4	15	1	3
7/ 7	14	158	11	126	0	3	1	8	2	17	0	3
7/ 8	31	189	25	151	1	4	2	10	3	20	0	3
7/ 9	28	217	23	174	1	5	1	11	3	23	0	3
7/10	56	273	45	219	1	6	3	14	6	29	1	4
7/11	225	498	181	400	5	11	11	25	24	53	3	7
7/12	302	800	243	643	7	18	15	40	33	86	4	11
7/13	725	1525	583	1226	16	34	37	77	79	165	11	22
7/14	1438	2963	1157	2383	31	65	73	150	156	321	21	43
7/15	1152	4115	998	3381	12	77	6	156	136	457	0	43
7/16	2020	6135	1750	5131	22	99	11	167	238	695	0	43
7/17	4496	10631	3718	8849	173	272	115	282	490	1185	0	43
7/18	6450	17081	5967	14816	85	357	97	379	290	1475	12	55
7/19	18605	35686	17211	32027	244	601	279	658	836	2311	35	90
7/20	15981	51667	15116	47143	165	766	0	658	700	3011	0	90
7/21	8936	60603	7532	54675	281	1047	327	985	795	3806	0	90
7/22	2510	63113	2116	56791	79	1126	92	1077	223	4029	0	90
7/23	7050	70163	5826	62617	422	1548	84	1161	675	4704	42	132
7/24	8658	78821	7155	69772	518	2066	104	1265	830	5534	52	184
7/25	7887	86708	6941	76713	368	2434	210	1475	368	5902	0	184
7/26	8103	94811	7131	83844	378	2812	216	1691	378	6280	0	184
7/27	4794	99605	2944	86788	1019	3831	151	1842	679	6959	0	184
7/28	3046	102651	1871	88659	648	4479	96	1938	432	7391	0	184
7/29	1679	104330	1031	89690	357	4836	53	1991	238	7629	0	184
7/30	1041	105371	639	90329	221	5057	33	2024	148	7777	0	184
7/31	664	106035	408	90737	141	5198	21	2045	94	7871	0	184
8/ 1	915	106950	659	91396	187	5385	21	2066	49	7920	0	184
8/ 2	529	107479	381	91777	108	5493	12	2078	28	7948	0	184

-Continued-

Appendix Table 55. Total number of fish targets and estimated species composition recorded by west bank sonar in the Susitna River at Susitna Station, 1 July through 8 August 1983 [cont.].

Date	Fish		Number of Fish									
Mo Day	Targets	Accum	Sockeye	Accum	Pink	Accum	Chum	Accum	Coho	Accum	King	Accum
8/ 3	586	108065	422	92199	120	5613	13	2091	31	7979	0	184
8/ 4	231	108296	166	92365	47	5660	5	2096	12	7991	0	184
8/ 5	306	108602	220	92585	63	5723	7	2103	16	8007	0	184
8/ 6	249	108851	179	92764	51	5774	6	2109	13	8020	0	184
8/ 7	350	109201	252	93016	72	5846	8	2117	19	8039	0	184
8/ 8	191	109392	137	93153	39	5885	4	2121	10	8049	0	184
Total	109392		93153		5885		2121		8049		184	

* Sonar counts apportioned by fish wheel counts.
Round-off error estimated(worst case) +/- 1 fish per day.

Appendix Table 56. Total number of fish targets and estimated species composition recorded by east bank sonar in the Susitna River at Susitna Station, 1 July through 8 August 1983.

Date		Fish		Number of Fish									
No	Day	Targets	Accum	Sockeye	Accum	Pink	Accum	Chum	Accum	Coho	Accum	King	Accum
7/ 1		35	35	15	15	13	13	3	3	1	1	3	3
7/ 2		80	115	35	50	30	43	7	10	2	3	7	10
7/ 3		63	178	27	77	23	66	5	15	1	4	5	15
7/ 4		93	271	40	117	34	100	8	23	2	6	8	23
7/ 5		123	394	53	170	45	145	11	34	3	9	11	34
7/ 6		115	509	50	220	43	188	10	44	3	12	10	44
7/ 7		127	636	55	275	47	235	11	55	3	15	11	55
7/ 8		109	745	47	322	40	275	9	64	2	17	9	64
7/ 9		100	845	43	365	37	312	9	73	2	19	9	73
7/10		94	939	41	406	35	347	8	81	2	21	8	81
7/11		284	1223	123	529	105	452	25	106	6	27	25	106
7/12		279	1502	121	650	103	555	24	130	6	33	24	130
7/13		554	2056	241	891	205	760	48	178	12	45	48	178
7/14		1351	3407	717	1608	167	927	202	380	265	310	0	178
7/15		1477	4884	784	2392	183	1110	221	601	289	599	0	178
7/16		1912	6796	1015	3407	237	1347	286	887	375	974	0	178
7/17		2145	8941	894	4301	849	2196	235	1122	156	1130	11	189
7/18		3414	12355	1423	5724	1351	3547	373	1495	249	1379	18	207
7/19		10102	22457	4690	10414	3402	6949	1237	2732	773	2152	0	207
7/20		4542	26999	2308	12722	1080	8029	933	3665	221	2373	0	207
7/21		2589	29588	1315	14037	616	8645	532	4197	126	2499	0	207
7/22		1605	31193	455	14492	886	9531	128	4325	136	2635	0	207
7/23		2443	33636	693	15185	1349	10880	194	4519	207	2842	0	207
7/24		2146	35782	287	15472	1763	12643	57	4576	38	2880	0	207
7/25		1994	37776	568	16040	1171	13814	104	4680	151	3031	0	207
7/26		2854	40630	813	16853	1676	15490	149	4829	216	3247	0	207
7/27		2920	43550	635	17488	2057	17547	102	4931	102	3349	25	232
7/28		1469	45019	319	17807	1035	18582	51	4982	51	3400	13	245
7/29		1527	46546	332	18139	1076	19658	53	5035	53	3453	13	258
7/30		803	47349	155	18294	610	20268	5	5040	34	3487	0	258
7/31		478	47827	92	18386	363	20631	3	5043	20	3507	0	258
8/ 1		386	48213	74	18460	293	20924	2	5045	16	3523	0	258
8/ 2		528	48741	102	18562	401	21325	3	5048	22	3545	0	258

-Continued-

Appendix Table 56. Total number of fish targets and estimated species composition recorded by east bank sonar in the Susitna River at Susitna Station, 1 July through 8 August 1983 [cont.].

Date		Fish		Number of Fish									
Mo	Day	Targets	Accum	Sockeye	Accum	Pink	Accum	Chum	Accum	Coho	Accum	King	Accum
8/	3	375	49116	72	18634	285	21610	2	5050	16	3561	0	258
8/	4	369	49485	75	18709	212	21822	62	5112	17	3578	3	261
8/	5	319	49804	65	18774	184	22006	53	5165	15	3593	2	263
8/	6	276	50080	56	18830	159	22165	46	5211	13	3606	2	265
8/	7	921	51001	188	19018	530	22695	154	5365	42	3648	7	272
8/	8	697	51698	143	19161	401	23096	116	5481	32	3680	5	277
Total		51698		19161		23096		5481		3680		277	

* Sonar counts apportioned by fish wheel counts.
Round-off error estimated(worst case) +/- 1 fish per day.

Appendix Table 57. Daily fishwheel catch by species on the east bank of the Susitna River at Susitna Station, 1 July through 5 September 1983[1].

Date	Number Wheels	Hours Open	Sockeye	Pink	Chum	Coho	Chinook
7/01	1	15	2	2			5
7/02	1	24	1				6
7/03	1	24	5	1			4
7/04	1	24	5	1			7
7/05	1	24	4				3
7/06	1	25	4	2			3
7/07	1	20	2				1
7/08	1	24	5				2
7/09	1	24		1			6
7/10	1	18				3	
7/11	1	21	7	1			
7/12	1	21	3	6	2	7	2
7/13	2	20	20	17	4	1	4
7/14	2	32.5	44	8	14	8	
7/15	2	42	25	7	10	14	
7/16	2	45	34	9	5	16	
7/17	2	48.5	38	42	6	13	1
7/18	2	29	42	34	15	1	
7/19	2	36.2	91	66	24	15	
7/20	2	38.5	65	22	24	5	
7/21	2	49	29	22	14	4	
7/22	2	37	24	51	9	11	
7/23	2	58	33	60	7	6	
7/24	2	44	15	92	3	2	
7/25	2	31.5	23	57	6	10	
7/26	2	49.5	26	44	3	3	
7/27	2	43	15	38	3	3	
7/28	2	47.5	15	39	1	3	
7/29	2	53.5	10	43	1	1	1
7/30	2	50	12	52		2	
7/31	2	47	3	19			
8/01	2	40	3	19	1	2	
8/02	2	49	10	24		2	
8/03	1	27	4	12		1	
8/04	1	26.5	7	19			
8/05	1	26	6	17	1	3	
8/06	1	23	6	11		1	
8/07	1	22	4	19	10		
8/08	1	25	4	10	11	2	1
Total[2]			651	867	174	139	46

[1] Fishwheel catch adjusted for 24 hours: $\frac{\text{daily catch x 24 hours}}{\text{hours open}}$

[2] Actual catch: sockeye - 586; pink - 797; chum - 143; coho - 119, and, chinook - 42.

Appendix Table 58. Daily fishwheel catch by species on the west bank of the Susitna River at Susitna Station, 1 July through 8 August 1983[1].

Date	Hours Open	Sockeye	Pink	Chum	Coho	Chinook
7/01	15	0				
7/02	24					4
7/03	24	2				
7/04	24	3				5
7/05	22	5				8
7/06	26	3	1			1
7/07	21.5	2	1			2
7/08	24	1				
7/09	24	2			1	
7/10	24	2				
7/11	26	10			2	1
7/12	23.5	22			3	
7/13	28.5	45	3	2	3	
7/14	14.5	66		5	12	2
7/15	28.5	55	2	1	13	
7/16	19	107			9	
7/17	11	129	6	4	17	
7/18	22	105	1	2	10	1
7/19	15	389	6	6	14	
7/20	19.5	367	4		17	
7/21	24	122	5	5	12	
7/22	23	39	1	2	5	
7/23	24.5	88	7	1	9	1
7/24	22.5	50	3	1	7	
7/25	15	43	2	3	2	
7/26	25	89	5	1	5	
7/27	21	43	14	1	5	
7/28	7	14	14	7		
7/29	21	10	10	3	3	
7/30	25	8	3		7	
7/31	24	17			3	
8/01	20.5	14			1	
8/02	23.5	27	5	2		
8/03	27	19	9		2	
8/04	26	19	10	1	4	
8/05	25	14	3			
8/06	24[2]	2				
8/07	22[2]	0	0	0	0	
8/08	25[2]	0	0	0	0	
Total		1,933	115	47	166	25

[1] Daily catch adjusted for 24 hours: $\frac{\text{Daily catch x 24 hours}}{\text{hours open}}$

[2] Data loss due to damaged live box.

[3] Actual catch: sockeye - 1,600; pink - 100; chum - 38; coho - 144; and, chinook - 27.

Appendix Table 59. Length composition of the major age classes of sockeye salmon collected in the Susitna River at Susitna Station, 1979-1983.

		Male			Female			Total			
Year	Age Class	Average Length (mm)[1]	Standard Error	Sample Size	Average Length (mm)	Standard Error	Sample Size	Average Length (mm)	Standard Error	Sample Size	Ratio Male-Female
1979	1.2	464	2.3	312	496	2.8	170	475	1.9	482	1.8:1
1980		509	4.2	104	508	3.3	96	508	--	200	1.1:1
1981		466	5.2	81	482	10.8	51	472	--	132	1.6:1
1982		449	3.8	163	469	7.0	80	456	4.9	249	2.0:1
1983		482	2.9	214	481	2.6	184	482	2.0	398	1.2:1
1979	1.3	574	5.8	78	567	2.1	170	569	2.3	248	0.5:1
1980		577	2.9	131	554	2.3	164	564	--	295	0.8:1
1981		579	2.1	654	562	1.5	711	570	--	1,365	0.9:1
1982		584	2.8	314	562	2.2	389	572	2.5	703	0.8:1
1983		573	3.2	85	556	2.0	93	564	1.9	178	0.9:1
1983	2.2	481	7.0	26	473	6.1	34	477	4.6	60	0.8:1
1982	2.3	571	8.6	47	542	5.4	60	559	6.8	107	0.8:1

[1] Lengths measured from mid-eye to fork of tail.

Appendix Table 60. Weight composition of the major age classes of sockeye salmon collected in the Susitna River at Susitna Station, 1979-1983.

		Male			Female			Total		
Year	Age Class	Average Weight (kg)	Standard Error	Sample Size	Average Weight (kg)	Standard Error	Sample Size	Average Weight (kg)	Standard Error	Sample Size
1979	1.2	1.7	0.03	311	2.0	0.05	169	1.8	0.03	480
1980		2.2	0.06	152	2.1	0.06	159	2.1	--	311
1981		1.7	0.08	81	2.0	0.08	51	1.8	--	132
1982		1.5	0.05	153	1.6	0.08	80	1.5	0.06	233
1983		1.9	0.04	211	1.7	0.03	182	1.8	0.02	393
1979	1.3	3.4	0.11	78	3.1	0.05	170	3.2	0.05	248
1980		3.3	0.09	82	2.7	0.05	145	2.9	--	227
1981		3.6	0.02	654	3.0	0.02	711	3.3	--	1,365
1982		3.7	0.06	291	3.0	0.04	362	3.3	0.05	653
1983		3.3	0.05	84	2.7	0.04	92	3.0	0.03	176
1983	2.2	1.8	0.09	24	1.7	0.06	34	1.8	0.05	58
1982	2.3	3.5	0.14	44	2.7	0.10	58	3.0	0.11	102

Appendix Table 61. Length composition from pink salmon collected in the Susitna River at Susitna Station, 1976-1983.

	Male			Female			Total			
Year	Average Length (mm) [1]	Standard Error	Sample Size	Average Length (mm)	Standard Error	Sample Size	Average Length (mm)	Standard Error	Sample Size	Ratio Male:Female
1976	--	--	--	--	--	--	460	--	630	--
1977	--	--	422	--	--	535	449	0.78	957	0.8:1
1978	--	--	--	--	--	--	451	--	1,242	--
1979	442	2.22	208	435	1.43	283	438	--	491	0.7:1
1980	445	2.53	160	434	2.13	161	439	--	321	1.0:1
1981	444	3.77	72	433	1.75	172	436	--	244	0.4:1
1982	432	3.38	145	413	3.45	163	422	3.42	308	0.9:1
1983	420	2.23	143	417	2.05	172	418	1.51	315	0.8:1

[1] Lengths measured from mid-eye to fork of tail.

Appendix Table 62. Weight composition from pink salmon collected in the Susitna River at Susitna Station, 1976-1983.

	Male			Female			Total		
Year	Average Weight (kg)	Standard Error	Sample Size	Average Weight (kg)	Standard Error	Sample Size	Average Weight (kg)	Standard Error	Sample Size
1976	--	--	--	--	--	--	1.5	--	630
1977	--	--	422	--	--	535	1.4	0.01	957
1978	--	--	--	--	--	--	1.4	--	1,242
1979	1.4	0.03	208	1.2	0.01	283	1.3	--	491
1980	1.3	0.03	160	1.2	0.02	161	1.2	--	321
1981	1.4	0.05	72	1.2	0.02	172	1.3	--	244
1982	1.2	0.03	145	1.0	0.02	163	1.1	0.03	308
1983	1.1	0.02	143	1.0	0.02	172	1.1	0.01	315

Appendix Table 63. Length composition from the major age classes of chum salmon collected in the Susitna River at Susitna Station, 1975-1983.

		Male			Female			Total			
Year	Age Class	Average Length (mm)[1]	Standard Error	Sample Size	Average Length (mm)	Standard Error	Sample Size	Average Length (mm)	Standard Error	Sample Size	Ratio Male:Female
1975	0.3	--	--	242	--	--	299	584	--	541	0.8:1
1976		--	--	87	--	--	95	608	2.0	182	0.9:1
1977		--	--	446	--	--	356	632	0.9	802	1.3:1
1978		--	--	215	--	--	281	596	1.3	496	0.8:1
1979		578	4.2	104	578	2.1	252	578	--	359	0.4:1
1980		577	12.4	11	574	6.3	24	575	--	35	0.5:1
1981		579	12.1	52	579	3.7	88	579	--	140	0.6:1
1982		604	3.1	116	593	2.1	167	597	2.5	283	0.7:1
1983		591	6.7	22	568	11.4	43	576	7.9	65	0.4:1
1976	0.4	--	--	16	--	--	23	636	4.3	39	0.7:1
1978		--	--	143	--	--	132	627	1.4	275	1.1:1
1980		581	8.0	5	618	14.5	4	597	--	9	1.3:1
1982		629	8.3	14	612	4.5	25	618	5.8	39	0.6:1
1983		619	9.3	14	598	4.7	39	604	4.2	53	0.4:1

Appendix Table 63. Length composition from the major age classes of chum salmon collected in the Susitna River at Susitna Station, 1975-1983 (continued).

		Male			Female			Total			
Year	Age Class	Average Length (mm)[1]	Standard Error	Sample Size	Average Length (mm)	Standard Error	Sample Size	Average Length (mm)	Standard Error	Sample Size	Ratio Male:Female
1976	0.2	--	--	19	--	--	27	552	4.4	46	0.7:1
1978		--	--	72	--	--	109	533	2.2	181	0.7:1
1980		546	9.4	5	528	5.8	22	531	--	27	0.2:1

[1] Lengths measured from mid-eye to fork of tail.

Appendix Table 64. Weight composition from the major age classes of chum salmon collected in the Susitna River at Susitna Station, 1980-1983.

		Male			Female			Total		
Year	Age Class	Average Weight (kg)	Standard Error	Sample Size	Average Weight (kg)	Standard Error	Sample Size	Average Weight (kg)	Standard Error	Sample Size
1980	0.3	3.1	0.21	11	3.0	0.14	24	3.0	--	35
1981		3.6	0.08	52	3.3	0.07	88	3.4	--	140
1982		3.9	0.07	99	3.6	0.04	160	3.7	0.05	259
1983		3.6	0.15	18	3.1	0.10	42	3.3	0.08	60
1980	0.4	3.8	0.36	5	3.8	0.35	4	3.8	--	9
1982		4.6	0.21	13	3.7	0.12	25	4.0	0.15	38
1983		4.3	0.20	14	3.5	0.10	37	3.7	0.09	51
1980	0.2	2.5	0.18	5	2.2	0.09	22	2.3	--	27

Appendix Table 65. Length composition from the major age classes of coho salmon collected in the Susitna River, 1975-1983.

		Male			Female			Total			
Year	Age Class	Average Length (mm)[1]	Standard Error	Sample Size	Average Length (mm)	Standard Error	Sample Size	Average Length (mm)	Standard Error	Sample Size	Ratio Male:Female
1975	1.1	--	--	57	--	--	42	497	--	99	1.4:1
1977		--	--	64	--	--	31	472	5.6	95	2.1:1
1978		--	--	117	--	--	100	488	3.3	217	1.2:1
1979		449	13.0	38	494	11.1	23	458	--	62	1.7:1
1980		452	10.8	23	476	7.7	36	467	--	59	0.6:1
1981		450	12.6	10	489	11.5	19	476	--	29	0.5:1
1982		553	10.2	25	519	7.5	42	531	8.5	67	0.6:1
1983		499	12.6	16	486	9.0	32	490	7.3	48	0.5:1
1975	2.1	--	--	156	--	--	151	545	--	307	1.0:1
1976		--	--	171	--	--	220	534	2.2	391	0.8:1
1977		--	--	613	--	--	406	519	2.4	519	1.5:1
1978		--	--	321	--	--	240	523	1.9	561	1.3:1
1979		502	7.7	96	528	6.9	121	516	--	217	0.8:1
1980		515	7.0	72	515	3.1	173	515	--	245	0.4:1
1981		524	8.4	81	529	5.0	99	527	--	180	0.8:1
1982		556	5.3	87	542	4.5	137	547	4.8	227	0.6:1
1983		534	6.2	47	523	5.1	74	527	3.9	121	0.6:1

[1] Lengths measured from mid-eye to fork of tail.

Appendix Table 66. Weight composition from the major age classes of coho salmon collected in the Susitna River, 1979-1983.

		Male			Female			Total		
Year	Age Class	Average Weight (kg)	Standard Error	Sample Size	Average Weight (kg)	Standard Error	Sample Size	Average Weight (kg)	Standard Error	Sample Size
1979	1.1	1.5	0.11	38	1.8	0.10	23	1.6	--	62
1980		1.5	0.10	23	1.8	0.10	36	1.7	--	59
1981		1.5	0.16	10	2.0	0.18	19	1.8	--	29
1982		2.9	0.17	25	2.3	0.11	42	2.5	0.13	67
1983		2.2	0.20	16	2.1	0.14	31	2.1	0.12	47
1979	2.1	2.4	0.08	96	2.5	0.01	121	2.5	--	217
1980		2.3	0.09	72	2.2	0.05	173	2.2	--	245
1981		2.7	0.11	81	2.7	0.08	99	2.7	--	180
1982		3.0	0.09	87	2.7	0.07	137	2.8	0.08	224
1983		2.7	0.11	44	2.5	0.07	71	2.5	0.06	115

Because the Alaska Department of Fish and Game receives federal funding, all of its public programs and activities are operated free from discrimination on the basis of race, color, national origin, age, or handicap. Any person who believes he or she has been discriminated against should write to:

O.E.O.
U.S. Department of the Interior
Washington, D.C. 20240