ADF&G TECHNICAL DATA REPORT NO. 93
(Limited Distribution)

STATE OF ALASKA
Bill Sheffield, Governor

UPPER COOK INLET SALMON (*Oncorhynchus* spp.) ESCAPEMENT STUDIES, 1982

By:
Bruce E. King
and
Kenneth E. Tarbox

August 1983

ALASKA DEPARTMENT OF FISH AND GAME
P.O. Box 3-2000, Juneau, Alaska 99802

Don W. Collinsworth
Commissioner

ADF&G TECHNICAL DATA REPORTS

This series of reports is designed to facilitate prompt reporting of data from studies conducted by the Alaska Department of Fish and Game, especially studies which may be of direct and immediate interest to scientists of other agencies.

The primary purpose of these reports is presentation of data. Description of programs and data collection methods is included only to the extent required for interpretation of the data. Analysis is generally limited to that necessary for clarification of data collection methods and interpretation of the basic data. No attempt is made in these reports to present analysis of the data relative to its ultimate or intended use.

Data presented in these reports is intended to be final, however, some revisions may occasionally be necessary. Minor revisions will be made via errata sheets. Major revisions will be made in the form of revised reports.

UPPER COOK INLET SALMON (*Oncorhynchus* spp.) ESCAPEMENT STUDIES

1982

By

Bruce E. King
Fisheries Biologist

and

Kenneth E. Tarbox
Fisheries Biologist

Alaska Department of Fish and Game
Division of Commercial Fisheries
Soldotna, Alaska 99669

August 1983

TABLE OF CONTENTS

	Page
LIST OF TABLES	i
LIST OF FIGURES	iii
LIST OF APPENDICES	iv
ABSTRACT	ix
INTRODUCTION	1
METHODS	1
RESULTS AND DISCUSSION	7
Kenai River	7
Kasilof River	15
Crescent River	28
Susitna River	28
Sockeye Salmon	33
Pink Salmon	41
Chum Salmon	43
Coho Salmon	43
Chinook Salmon	45
Upper Cook Inlet Minor Systems	47
Chinitna Bay	47
Big River	47
Chakachatna-McArthur Rivers	47
Chuitna River	50
Upper Cook Inlet Westside Streams	50
Beluga River	50
Fish Creek (Big Lake)	50
Cottonwood Creek (Cottonwood-Wasilla Lakes)	50
Anchorage Area Streams	50
South Kenai Peninsula Streams	50
Packers Creek (Packers Lake)	51
ACKNOWLEDGMENTS	51
LITERATURE CITED	52
APPENDICES	54

LIST OF TABLES

Table		Page
1.	Estimated sockeye salmon escapement recorded by side-scan sonar in the Kenai, Kasilof, Crescent, and Susitna Rivers, 1977-1982	8
2.	Late run Kenai River sockeye salmon escapement summary, 1968-1982	9
3.	Peak late-run sockeye salmon escapement counts in eight index areas, Kenai River drainage, 1969-1982	10
4.	Salmon escapement counts conducted on selected tributaries of the Kenai River, 1982	11
5.	Bank distribution and timing of salmon escapement recorded by side-scan sonar in the Kenai, Kasilof, Crescent, and Susitna Rivers, 1979-1982	12
6.	Date of cumulative percent of late run sockeye salmon counts recorded in the Kenai River, 1968-1982	16
7.	Age composition of sockeye salmon collected in the Kenai River, 1969-1982	17
8.	Peak sockeye salmon escapement counts in seven index areas, Kasilof River drainage, 1976-1982	19
9.	Distribution (percent) of sockeye salmon in the major index tributary systems of Tustumena Lake, 1975-1982	20
10.	Date of cumulative percent of sockeye salmon counts recorded in the Kasilof River, 1968-1982	21
11.	Tagging period, number of tags recovered, and mean residence time in Tustumena Lake of sockeye salmon bound for Bear and Glacier Flats Creeks, 1982	22
12.	Age composition of sockeye salmon collected in the Kasilof River, 1969-1982	27
13.	Date of cumulative percent of sockeye salmon counts recorded in the Crescent River, 1979-1982	31
14.	Age composition of sockeye salmon collected in the Crescent River, 1979-1982	32
15.	Peak sockeye salmon escapement counts in Susitna River tributary index areas, 1972-1982	35
16.	Salmon escapement counts in Susitna River tributaries, 1982	36
17.	Age composition of sockeye salmon collected in the Susitna River, 1975-1982	40

LIST OF TABLES (Continued)

Table		Page
18.	Estimated chum salmon, pink salmon, coho salmon, and chinook salmon escapement recorded by side-scan sonar in the Susitna River, 1977-1982	42
19.	Unweighted age composition of chum salmon collected in the Susitna River, 1975-1982	44
20.	Unweighted age composition of coho salmon collected in the Susitna River, 1975-1982	46
21.	Salmon escapement counts in selected Upper Cook Inlet anadromous streams, 1982	48

LIST OF FIGURES

Figure		Page
1.	Kenai River drainage and major sockeye salmon rearing lakes	2
2.	Kasilof River drainage and major sockeye salmon spawning and rearing areas	3
3.	Crescent River drainage and major sockeye salmon rearing lake . . .	4
4.	Susitna River drainage and major tributary rivers	5
5.	Kenai River side-scan sonar count sector distribution over time (grouped in three-day time periods), 22 June - 4 August 1982 . . .	13
6.	Kenai River side-scan sonar count hourly distribution over time (two-hour increments grouped in three-day time periods), 22 June - 4 August 1982	14
7.	Percent of total tags recovered in Tustumena Lake tributaries (grouped by date of tagging at the sonar site) expressed in number of fish enumerated by sonar during each tagging period	23
8.	Kasilof River side-scan sonar count sector distribution over time (grouped in five-day time periods), 10 June - 3 August 1982	25
9.	Kasilof River side-scan sonar count hourly distribution over time (two-hour increments grouped in five-day time periods), 10 June - 3 August 1982	26
10.	Crescent River side-scan sonar count sector distribution over time (grouped in three-day time periods), 1 July - 31 July 1982	27
11.	Crescent River side-scan sonar count hourly distribution over time (two-hour increments grouped in three-day time periods), 1 July - 31 July 1982	30
12.	Susitna Station side-scan sonar count sector distribution over time (grouped in six-day time periods), 1 July - 5 September 1982 . . .	38
13.	Susitna Station side-scan sonar count hourly distribution over time (two-hour increments grouped in six-day time periods), 1 July - 5 September 1982	39

LIST OF APPENDICES

Appendix Table		Page
1.	Total number of fish targets and estimated species composition recorded by side-scan sonar in the Kenai River, 22 June through 4 August 1982	55
2.	1982 north bank of Kenai River side-scan sonar counts by sector	57
3.	1982 south bank of Kenai River side-scan sonar counts by sector	58
4.	1982 north bank of Kenai River side-scan sonar counts by sector, three-day time periods	59
5.	1982 south bank of Kenai River side-scan sonar counts by sector, three-day time periods	60
6.	1982 north bank of Kenai River side-scan sonar counts by hour	61
7.	1982 south bank of Kenai River side-scan sonar counts by hour	62
8.	1982 north bank of Kenai River side-scan sonar counts by hour, three-day time periods	63
9.	1982 south bank of Kenai River side-scan sonar counts by hour, three-day time periods	64
10.	Total number of fish targets and estimated species composition recorded by north bank sonar in the Kenai River, 22 June through 3 August 1982	65
11.	Total number of fish targets and estimated species composition recorded by south bank sonar in the Kenai River, 22 June through 3 August 1982	67
12.	Daily fishwheel catch by species on the north bank of the Kenai River, 22 June through 4 August 1982	69
13.	Age composition of sockeye salmon collected by test fishing in the Kenai River, 1982	70
14.	Length composition of the major age classes of sockeye salmon collected in the Kenai River, 1976-1982	71
15.	Weight composition of the major age classes of sockeye salmon collected in the Kenai River, 1981-1982	72
16.	Total number of fish targets and estimated species composition recorded by side-scan sonar in the Kasilof River, 10 June through 3 August 1982	73
17.	Total number of fish targets and estimated species composition recorded by north bank sonar in the Kasilof River, 10 June through 3 August 1982	75

LIST OF APPENDICES (Continued)

Appendix Table		Page
18.	Total number of fish targets and estimated species composition recorded by south bank in the Kasilof River, 10 June through 3 August 1982	77
19.	Summary of Kasilof sonar-site tagged sockeye salmon recovered in Tustumena Lake tributaries, 1982	79
20.	1982 north bank of Kasilof River side-scan sonar counts by sector	83
21.	1982 south bank of Kasilof River side-scan sonar counts by sector	84
22.	1982 north bank of Kasilof River side-scan sonar counts by sector, five-day time periods	85
23.	1982 south bank of Kasilof River side-scan sonar counts by sector, five-day time periods	86
24.	1982 north bank of Kasilof River side-scan sonar counts by hour	87
25.	1982 south bank of Kasilof River side-scan sonar counts by hour	89
26.	1982 north bank of Kasilof River side-scan sonar counts by hour, five-day time period	91
27.	1982 south bank of Kasilof River side-scan sonar counts by hour, five-day time period	92
28.	Daily fishwheel catch by species on the south bank of the Kasilof River, 10 June through 3 August 1982	93
29.	Length composition of the major age classes of sockeye salmon collected in the Kasilof River, 1976-1982	95
30.	Weight composition of the major age classes of sockeye salmon collected in the Kasilof River, 1981-1982	96
31.	Daily sonar counts and expanded oscilloscope counts recorded on the Kasilof River, 1982	97
32.	Total number of fish targets and estimated species composition recorded by side-scan sonar in the Crescent River, 1 July through 31 July 1982	99
33.	1982 north bank of Crescent River side-scan sonar counts by sector	100

LIST OF APPENDICES (Continued)

Appendix Table		Page
34.	1982 south bank of Crescent River side-scan sonar counts by sector	101
35.	1982 north bank of Crescent River side-scan sonar counts by sector, three-day time periods	102
36.	1982 south bank of Crescent River side-scan sonar counts by sector, three-day time periods	103
37.	1982 north bank of Crescent River side-scan sonar counts by hour	104
38.	1982 south bank of Crescent River side-scan sonar counts by hour	105
39.	1982 north bank of Crescent River side-scan sonar counts by hour, three day time periods	106
40.	1982 south bank of Crescent River side-scan sonar counts by hour, three-day time periods	107
41.	Total number of fish targets and estimated species composition recorded by north bank side-scan sonar in the Crescent River, 1 July through 31 July 1982	108
42.	Total number of fish targets and estimated species composition recorded by south bank side-scan sonar in the Crescent River, 1 July through 31 July 1982	109
43.	Daily fishwheel and seine catch by species from the Crescent River, 1 July through 31 July 1982	110
44.	Length composition of the major age classes of sockeye salmon collected in the Crescent River, 1979-1982	111
45.	Weight composition of the major age classes of sockeye salmon collected in the Crescent River, 1980-1982	112
46.	Total number of fish targets and estimated species composition recorded by west bank side-scan sonar in the Susitna River, 1 July through 5 September 1982	113
47.	Apportioned sonar counts and Peterson population (tag/recapture) estimates by species and sampling location, Adult Anadromous Investigations, Susitna Hydroelectric Studies, 1982	115
48.	1982 west bank of Susitna River side-scan sonar counts by sector	116

LIST OF APPENDICES (Continued)

Appendix Tables		Page
49.	1982 east bank of Susitna River side-scan sonar counts by sector	117
50.	1982 west bank of Susitna River side-scan sonar counts by sector, six-day time periods	118
51.	1982 east bank of Susitna River side-scan sonar counts by sector, six-day time periods	119
52.	1982 west bank of Susitna River side-scan sonar counts by hour	120
53.	1982 east bank of Susitna River side-scan sonar counts by hour	121
54.	1982 west bank of Susitna River side-scan sonar counts by hour, six-day time periods	122
55.	1982 east bank of Susitna River side-scan sonar counts by hour, six-day time periods	123
56.	Daily fishwheel catch by species on the west bank of the Susitna River, 1 July through 5 September 1982	124
57.	Daily fishwheel catch by species on the east bank of the Susitna River, 1 July through 5 September 1982	126
58.	Length composition of the major age classes of sockeye salmon collected in the Susitna River, 1979-1982	128
59.	Weight composition of the major age classes of sockeye salmon collected in the Susitna River, 1979-1982	129
60.	Total number of fish targets and estimated species composition recorded by east bank side-scan sonar in the Susitna River, 1 July through 5 September 1982	130
61.	Length composition from pink salmon collected in the Susitna River, 1976-1982	132
62.	Weight composition from pink salmon collected in the Susitna River, 1976-1982	133
63.	Total number of fish targets and estimated species composition recorded by side-scan sonar in the Susitna River, 1 July through 5 September 1982	134
64.	Length composition from the major age classes of chum salmon collected in the Susitna River, 1975-1982	136

LIST OF APPENDICES (Continued)

Appendix Table		Page
65.	Weight composition from the major age classes of chum salmon collected in the Susitna River, 1980-1982	137
66.	Length composition from the major age classes of coho salmon collected in the Susitna River, 1976-1982	138
67.	Weight composition from the major age classes of coho salmon collected in the Susitna River, 1979-1982	139

ABSTRACT

Sockeye salmon *(Oncorhynchus nerka)* escapements into the four major river systems of Upper Cook Inlet were estimated by hydroacoustic and other techniques. Escapements totaled 619,831 into the Kenai River, 180,239 into the Kasilof River, 58,957 into the Crescent River, and 215,856 - 265,332 into the Susitna River. Escapements of chum salmon *(O. keta)*, coho salmon *(O. kisutch)*, and pink salmon *(O. gorbuscha)* into the Susitna River were also monitored. Estimates derived by a combination of sonar and mark-recapture techniques were 926,807 pink salmon, 458,272 chum salmon, and 79,824 coho salmon. Age, sex, length, and weight data for the above salmon species are also presented. In addition, escapement information for Upper Cook Inlet streams compiled by other ADF&G divisions, state and federal agencies, private consultants, and non-profit corporations are included.

INTRODUCTION

In 1982, sockeye salmon *(Oncorhynchus nerka)* escapements were enumerated or monitored in the Kenai, Kasilof, Crescent, and Susitna River drainages (Figures 1 through 4). Pink salmon *(O. gorbuscha)*, chum salmon *(O. keta)*, and coho salmon *(O. kisutch)* escapements into the Susitna River were also monitored during the sockeye salmon run.

A description of the Upper Cook Inlet management area and its major sockeye salmon producing rivers is presented in Tarbox et al. (1981). Historical information on escapement enumeration efforts can be found in Waltemyer et al. (1980).

The objectives of research in the Upper Cook Inlet area conducted by the Commercial Fisheries Division on the Kenai, Kasilof, Susitna, and Crescent Rivers in 1982 were to estimate:

(1) The relative magnitude of escapement and migration timing of sockeye salmon in the mainstem rivers;

(2) The age, length, sex, and scale characteristics of the sockeye salmon escapement; and

(3) The magnitude, timing, and distribution of adult sockeye salmon within established index areas (excluding Crescent River).

Additional objectives for the Susitna River project were to assess:

(1) The relative magnitude of escapement of coho salmon, chum salmon, and pink salmon in the mainstem river; and

(2) The age, length, weight, and sex characteristics of coho salmon, chum salmon, and pink salmon escapements.

The final objective of the 1982 Data Report was to document additional salmon research conducted by other investigators in 1982 on major tributaries of Kenai, Kasilof, Susitna, and Crescent River drainages as well as other systems in the Upper Cook Inlet area. Population estimates or peak counts made by other ADF&G divisions, state and federal agencies, private consultants, and non-profit corporations were summarized and presented when available.

METHODS

Since the early 1960s the Alaska Department of Fish and Game has contracted the Bendix Corporation to develop sonar equipment to count the number of sockeye salmon migrating to the spawning grounds in the major rivers of the Cook Inlet area. Glacial silt in these rivers severely limits less expensive visual means of escapement assessment. This development has resulted in the installation of Bendix side-scanning sonar counters in the Kenai, Kasilof, Susitna, and Crescent Rivers. Two units (one per bank) have been operated in each system since 1980.

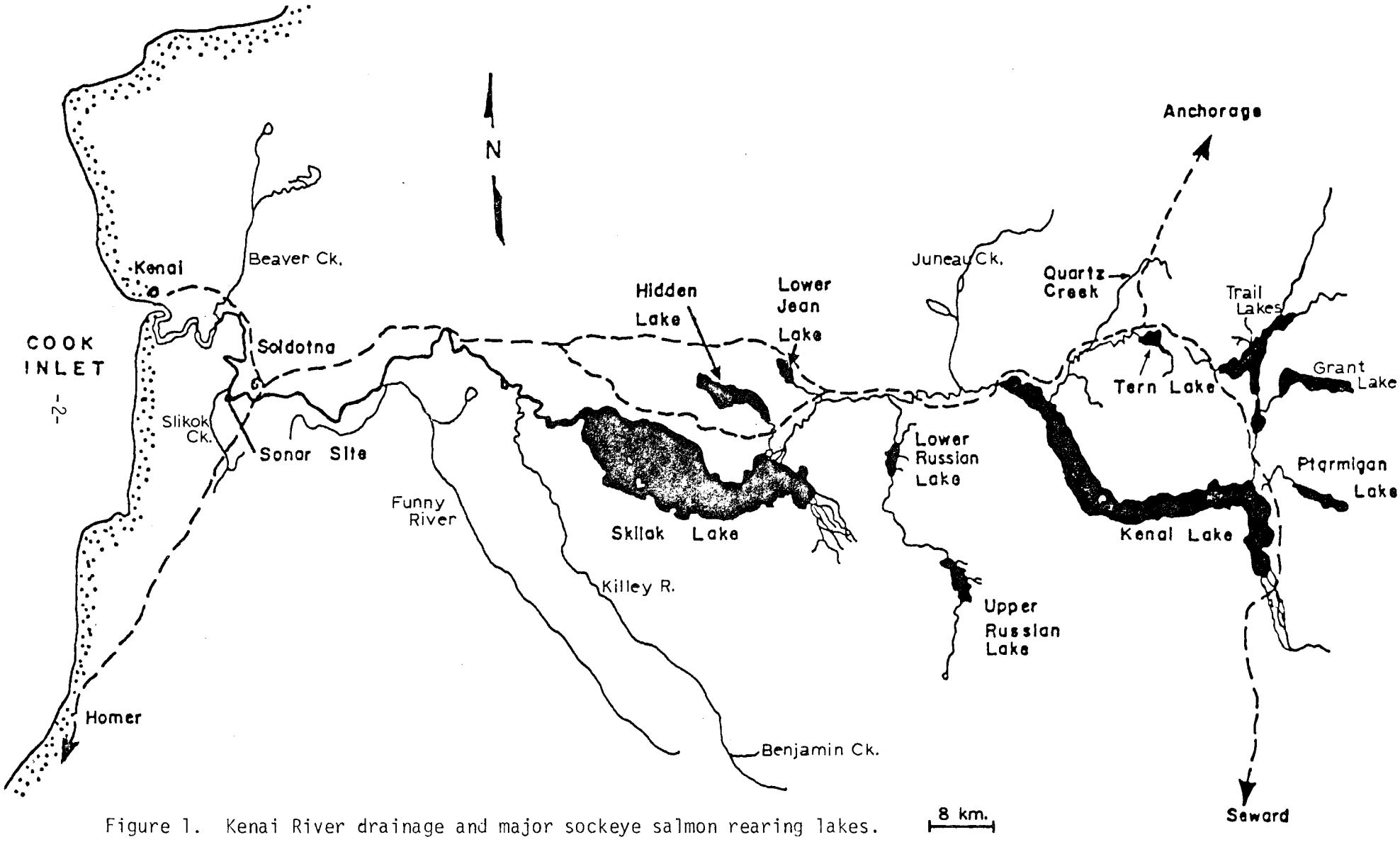

Figure 1. Kenai River drainage and major sockeye salmon rearing lakes.

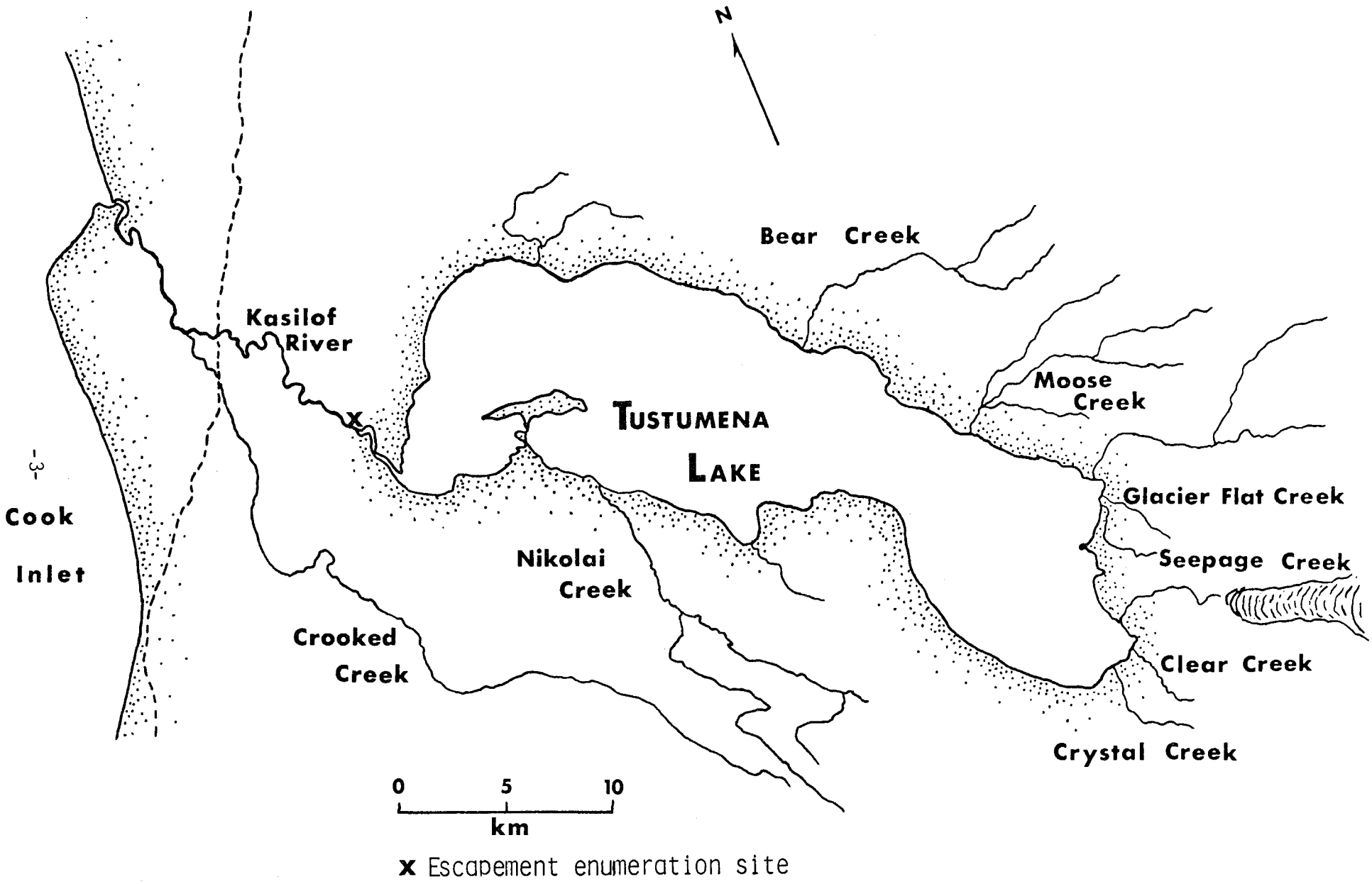

Figure 2. Kasilof River drainage and major sockeye salmon spawning and rearing areas.

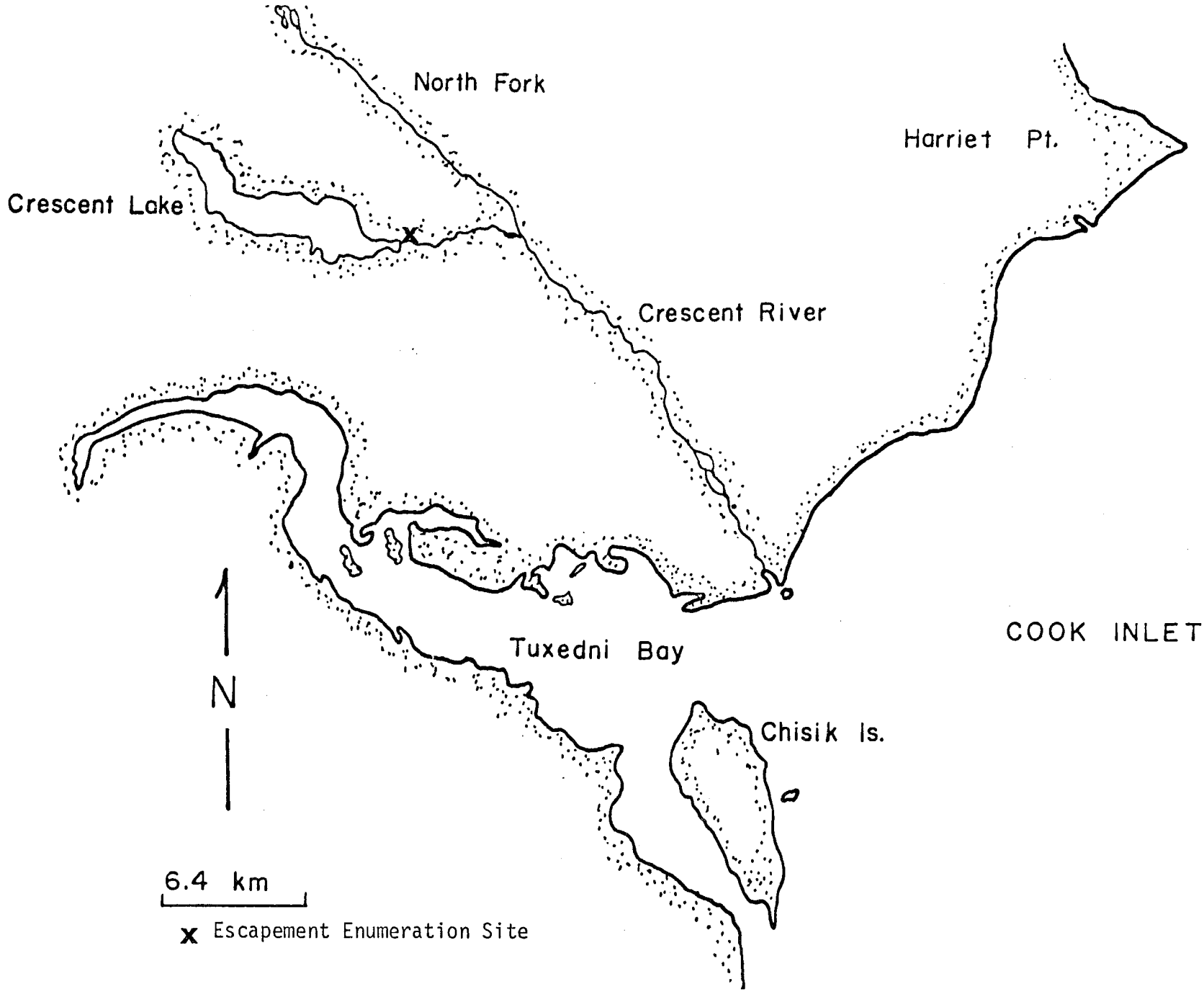

Figure 3. Crescent River drainage and major sockeye salmon rearing lake.

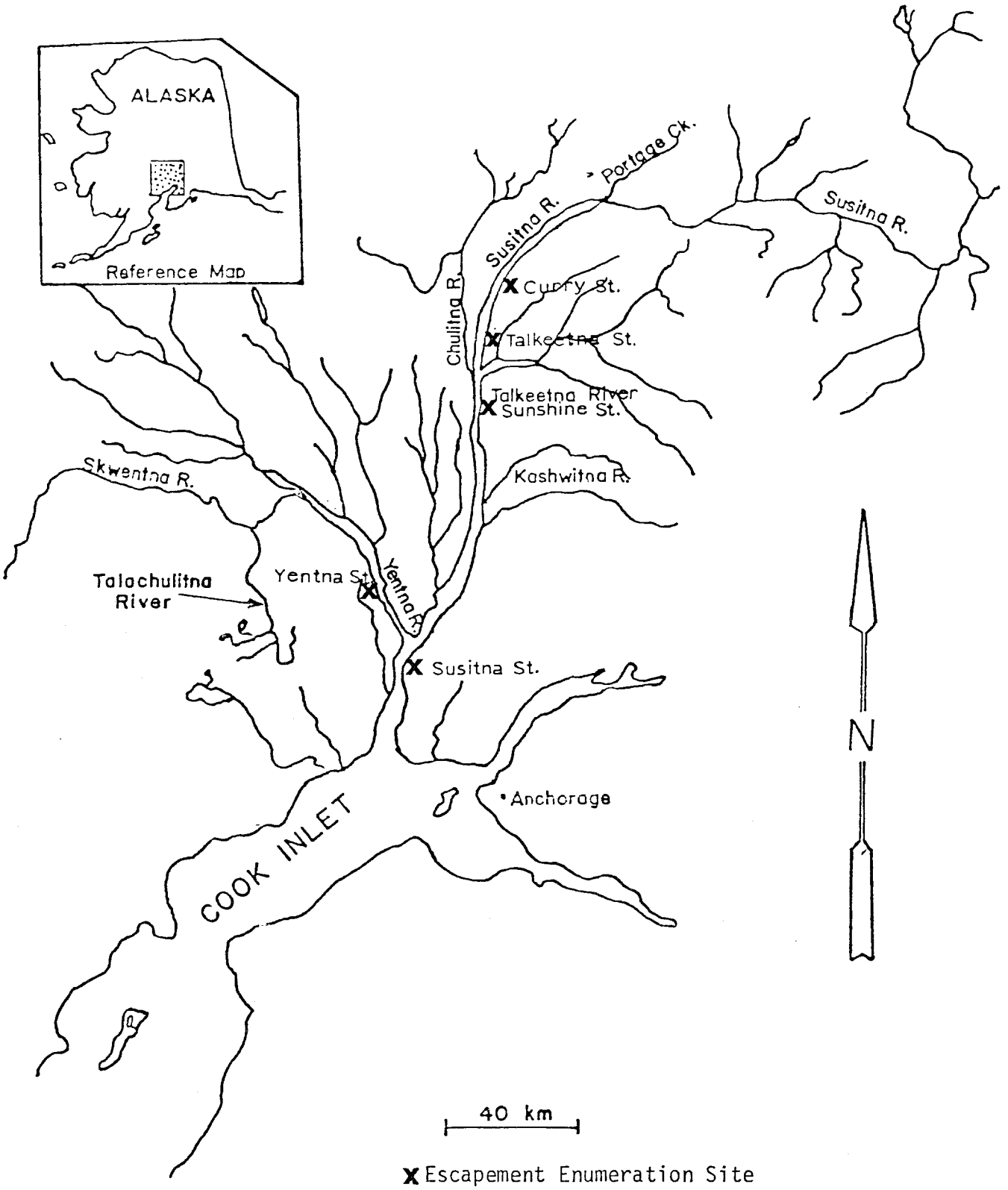

Figure 4. Susitna River drainage and major tributary rivers.

Model years used in 1982 were the 1980 model (Kenai River), 1978 model (Susitna and Kasilof Rivers), and 1977 and 1979 models (Crescent River).

Procedures for deployment of the sides-scan sonar substrates, equipment operation, calibration, and hydroacoustic fish counting equipment used prior to 1980 are summarized in Tarbox et al. (1982).

Field enumeration activities in 1982 began and ended on the following dates:

Kenai River	-	22 June to 4 August
Kasilof River	-	10 June to 3 August
Susitna River	-	1 July to 5 September
Crescent River	-	1 July to 31 July

Fishwheels were installed at all sites except Crescent River to assess migration timing and relative abundance of salmon species, provide relative abundance data for apportionment of sonar counts, and obtain age, length, weight, and sex composition samples. Crescent River fish samples were obtained by beach seine. The data obtained for each species during 1982 was as follows:

Sockeye salmon: All adult sockeye salmon captured were sampled until a sample size of 300 fish had been obtained. Subsequently, a minimum of 40 fish per day (or 280 per week) were sampled. Information included age (from scales), length, weight, and sex composition.

Chum and coho salmon: Age, weight, length, and sex composition data were collected from all adults captured.

Pink salmon: A minimum of 10 age, length, weight, and sex composition samples were collected daily.

Sockeye salmon sampled at the Kasilof River sonar site were marked prior to release with Floy dart tags to investigate the possibility of differential river entry timing by individual Tustumena Lake tributary spawning populations.

Index-area escapement surveys were conducted by staff personnel on the Kenai, Kasilof, and Susitna Rivers, and various minor Northern District river systems. A combination of helicopter and fixed wing aircraft, and foot surveys were conducted from 1 August to 15 September. These surveys have been conducted annually to obtain an indication of spawner distribution and relative escapement magnitude within tributaries. In the initial years of side-scan sonar deployment and to some degree in later years, index-area surveys have also served as an alternate index of escapement magnitude into the Kenai and Kasilof Rivers.

Migratory behavior data (side-scan sector and hourly distribution of counts) were analyzed over time using analysis and plotting programs described in Roberson et al. (1982). Migratory timing data were based on apportioned sonar counts or fishwheel catches (Susitna Station). Kasilof River daily oscilloscope calibration counts (four times per day, 30 minutes per session for each bank) were expanded for periods between monitoring and totaled for each day. Daily oscilloscope estimates were totaled for the season and compared with daily sonar counts to gauge counter accuracy.

RESULTS AND DISCUSSION

The following escapement data are presented by drainage. Adult escapement estimates obtained from side-scan sonar equipment are considered to be minimum estimates at the sonar site. Factors affecting accuracy of counts, and sources of mortality above the sonar site (notably the sport fishing harvest) are presented where known.

Kenai River

A total of 597,920 salmon were enumerated in the Kenai River from 22 June through 4 August 1982 (Appendix Table 1). The apportioned sockeye salmon estimate for the above dates (592,111) was expanded based on historical run timing to 619,831 fish for the season. This total is approximately 59% higher than the average sockeye salmon escapement for the four years since escapement goals were raised to their present level (Table 1), and exceeds the maximum escapement level of 500,000 fish by 24%. When sport fish harvest estimates are subtracted from the sonar count, the estimated number of spawners was 559,680 (Table 2).

Escapement estimates were obtained for eight tributaries of the Kenai River from spawning ground surveys and weir counts (Table 3). Data from index-area surveys indicate counts for 1982 are comparable in magnitude to previous years. Establishment of a weir on Quartz Creek is primarily responsible for the increase in counts in that tributary relative to earlier years, although a corresponding index area survey produced a peak count of 26,000 sockeye salmon (Litchfield, pers. comm.). Peak counts for other salmon species (and early-run sockeye salmon) obtained during index-area surveys are reported in Table 4.

Known tributary spawning accounted for 31% of the estimated sockeye salmon spawners in the drainage. Two-thirds of this total were counted in Quartz Creek and Russian River. The Russian River late run exceeded the historic mean by approximately 50% (Nelson 1983) although the escapement goal (30,000 above the weir at Lower Russian Lake) was exceeded by only 630 fish. The remainder spawned below the weir.

Migratory behavior of sockeye salmon was studied by analysis of counting sector and hourly distribution, and cumulative percent of sonar counts by day (migratory timing). Sockeye salmon preference for the south bank of the Kenai River at the sonar site was not typical of previous years experience (61% of the counts; Table 5). Distribution of counts by hour and sector, however, were within the boundaries of data compiled from 1979-1981 (Tarbox et al. 1982). Shifts in the spatial distribution of migrating fish in relation to the shoreline as the season progressed were abrupt, but not unanticipated based on prior years' observations. Sockeye tended to move closer to shore as the fish passage rate increased, beginning 16 July (Figure 5).

Hourly counts on the north bank progressed from a relatively even distribution early in the season to a skewed distribution (6% per hour from 1700 through 0200) from 10 July through 27 July (Figure 6). For the remainder of the run over 11% of the fish moved by the counters per hour from 2300 hours through 0400 hours. South bank counts were concentrated in afternoon and evening hours throughout the season (59% from 1500 hours through 2400 hours) with a similar increasingly skewed distribu-

Table 1. Estimated sockeye salmon escapement recorded by side-scan sonar in the Kenai, Kasilof, Crescent, and Susitna Rivers, 1977-1982.

Year	System			
	Kenai R.	Kasilof R.	Crescent R.	Susitna R.
1977	708,000	155,300	[3]	237,514[5]
1978	398,900	166,600	[3]	94,400
1979	285,020	152,179[2]	86,654	156,890
1980	464,038	187,154[2]	90,863	190,866
1981	407,639	256,625[2]	41,213	340,232
1982	619,831[1]	180,239[2]	58,957	215,856 - 265,332[4]

[1] Includes counts after 21 June only.

[2] Includes counts from the designated early period (prior to 21 June).

[3] No counts made.

[4] Includes side scan sonar and mark/recapture estimates from Susitna Hydroelectric Project studies.

[5] Fishwheel mark/recapture estimate.

Table 2. Late run Kenai River sockeye salmon escapement summary, 1968-1982[1].

Date	Sonar count	Russian River sport harvest[2]	Kenai River mainstem sport harvest[4]	Estimated total harvest above sonar site[4]	Sonar count less sport harvest[5]
1968	88,000	5,820			
1969	53,000	1,150			
1970	73,000	600			
1971	--	10,730			
1972	317,000	16,050			
1973	367,000	8,930			
1974	161,000	8,500			
1975	142,000	8,390			
1976	380,000	13,700			
1977	708,000	27,440	16,933	44,373[6]	663,627
1978	398,900	24,530	24,542	49,072[6]	349,828
1979	285,020	26,830	12,328	39,158[6]	245,862
1980	464,038	33,490	18,592	52,082[6]	411,956
1981	407,639	23,720	14,451	38,171	369,468
1982	619,831	10,320	38,397	48,717	571,114

[1] Data compiled March 1981. Additions March 1982, January 1983.

[2] Data from Nelson (1982) Federal Aid Report, Russian River Sockeye Salmon Study, AFS-44-7.

[3] Data from Sport Fish Division Statewide Harvest Estimate. Includes harvest above the Soldotna bridge (and sonar site) only.

[4] Total of Russian River sport harvest and Kenai River mainstem harvest above the Soldotna bridge.

[5] Considered estimate of spawners above the sonar site.

[6] Cross et al. (in press).

Table 3. Peak late-run sockeye salmon escapement counts in eight index areas, Kenai River drainage, 1969-1982.

Year	Railroad Creek	Johnson Creek	Carter-Moose-Creek	Ptarmigan Creek	Tern (Mud) Lake	Quartz Creek	Hidden Lake	Russian River[1]	Total index area escapements[2]
1969	100	75	598	5	487	421	500	30,020	32,200
1970	99	118	348	7	561	200	323	28,420	30,100
1971	194	160	3,201	45	1,370	808	1,958[4]	64,430	72,200
1972	700	150	3,400	(400)[3]	1,200	(2,000)[3]	4,956[4]	85,000	97,900
1973	521	1,714	660	1,041	1,731	3,173	690[4]	31,660	41,200
1974	3	46	939	558	(700)[3]	255	1,150	26,860	30,600
1975	522	105	1,278	186	1,214	1,068	1,375	32,660	38,400
1976	1,032	(800)[3]	5,558	(500)[3]	1,548	3,372	4,860[4]	35,420	53,100
1977	1,262	450	6,515	1,513	2,230	3,037	1,055[4]	38,500	54,600
1978	1,749	780	1,933	3,529	1,126	10,627	4,647[4]	52,560	76,900
1979	--	588	3,986	523	1,693	277	5,762[4]	91,840	104,700
1980	1,259	253	4,879	5,752	2,575	7,982	27,448[4]	87,200	137,300
1981	1,276	142	4,370	1,421	3,402	5,998[4]	15,939[4]	48,690	81,200
1982	2,518	498	4,752	7,525	4,300	70,540[4]	8,648[4]	75,630	174,400

[1] Includes weir counts and escapement below falls.

[2] Total of individual counts rounded to the nearest hundred fish.

[3] Actual data not available. Average contribution to the total index for years 1968, 1970, 1971, 1973, 1975, and 1977 used to estimate the escapement.

[4] FRED Division weir count.

Table 4. Salmon escapement counts conducted on selected tributaries of the Kenai River, 1982.

Tributary	Method	Peak Count		
		Sockeye	Coho	Chinook
Russian River[1]	Weir	90,580[2]	2,406[3]	103
Quartz Creek[3]	Weir	70,540	2,522	331
Hidden Lake[3]	Weir	8,648		
Daves Creek[3]	Stream count			35
Crescent Creek[3]	Stream count			79
Grant Creek[3]	Stream count			54
Juneau Creek[3]	Stream count			79
Benjamin Creek[3]	Stream count			500
Slikok Creek[4]	Observations		15	40
Beaver Creek[4]	Observations		133	7
Soldotna Creek[4]	Observations		18	

[1] Nelson 1983.

[2] Early run counted from 11 June through 23 July.

[3] Flagg 1982.

[4] Personal communications, George Elliott, U.S. Fish and Wildlife Service. Observations only; surveys variable in length and location.

Table 5. Bank distribution and timing of salmon escapement recorded by side-scan sonar in the Kenai, Kasilof, Crescent, and Susitna Rivers, 1979-1982[1].

Site-Species	Percent of Total Fish Targets				Fifty Percent Passage Date			
Bank	1982	1981	1980	1979	1982	1981	1980	1979
Kenai R. Sockeye								
North Bank	39	72	61	72	7/20	7/14	7/18	[2]
South Bank	61	28	39	28	7/21	7/19	7/19	[2]
Both Banks	100	100	100	100	7/21	7/14	7/18	7/19
Kasilof R. Sockeye								
North Bank	73	69	52	53	7/19	7/04	7/17	[2]
South Bank	27	31	48	47	7/18	7/02	7/16	[2]
Both Banks	100	100	100	100	7/19	7/04	7/16	7/12
Crescent R. Sockeye								
North Bank	54	57	49	[3]	7/21	7/20	7/22	[2]
South Bank	46	43	51	[3]	7/21	7/20	7/22	[2]
Both Banks	100	100	100	100	7/21	7/20	7/22	7/17
Susitna R. Sockeye								
East Bank	[4]	51	18	23	7/27	7/20	7/22	7/22
West Bank	[4]	49	82	77	[4]	7/15	7/22	7/22
Both Banks	100	100	100	100	[4]	7/17	7/22	7/22
Susitna R. Pink								
East Bank	[4]	92	71	71	7/29	7/24	7/30	7/23
West Bank	[4]	8	29	29	[4]	7/28	8/02	7/22
Both Banks	100	100	100	100	[4]	7/23	7/30	7/23
Susitna R. Chum								
East Bank	[4]	91	79	91	7/30	7/26	7/29	7/27
West Bank	[4]	9	21	9	[4]	8/16	8/12	8/21
Both Banks	100	100	100	100	[4]	7/27	7/30	7/27
Susitna R. Coho								
East Bank	[4]	70	29	47	7/30	7/27	7/30	7/28
West Bank	[4]	30	71	53	[4]	8/07	8/02	7/25
Both Banks	100	100	100	100	[4]	7/28	8/02	7/27

[1] Based on estimated run timing when counters removed prior to end of sockeye run.

[2] Daily counts by bank not determined after post-season adjustment of total daily counts.

[3] South-bank counts estimated using hourly visual and multiple transducer sonar counts.

[4] Mid-season data loss prevented determination of bank distribution and timing.

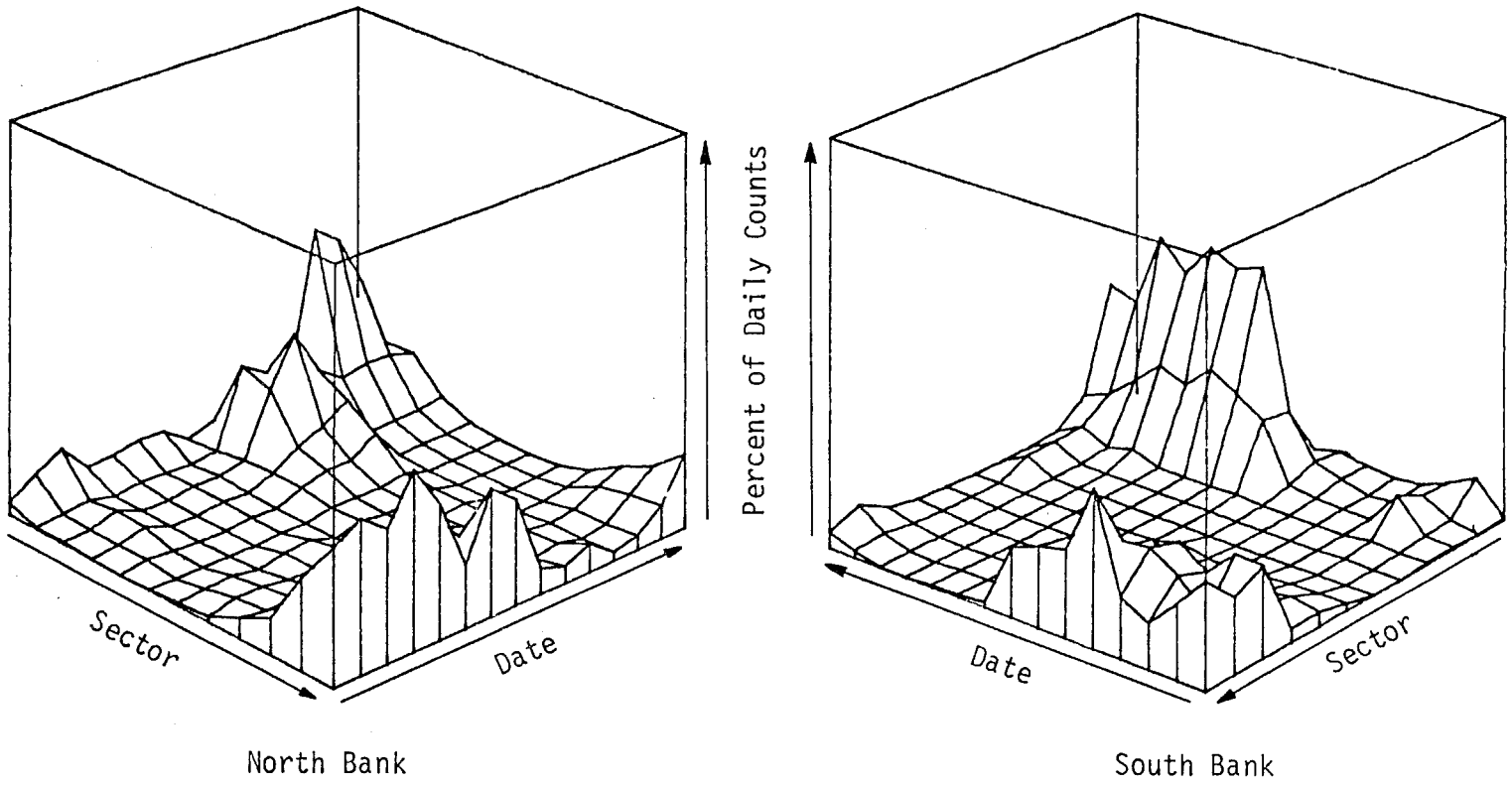

Figure 5. Kenai River side-scan sonar count sector distribution over time (grouped in three-day time periods), 22 June - 4 August 1982. See Appendix Tables 2-5.

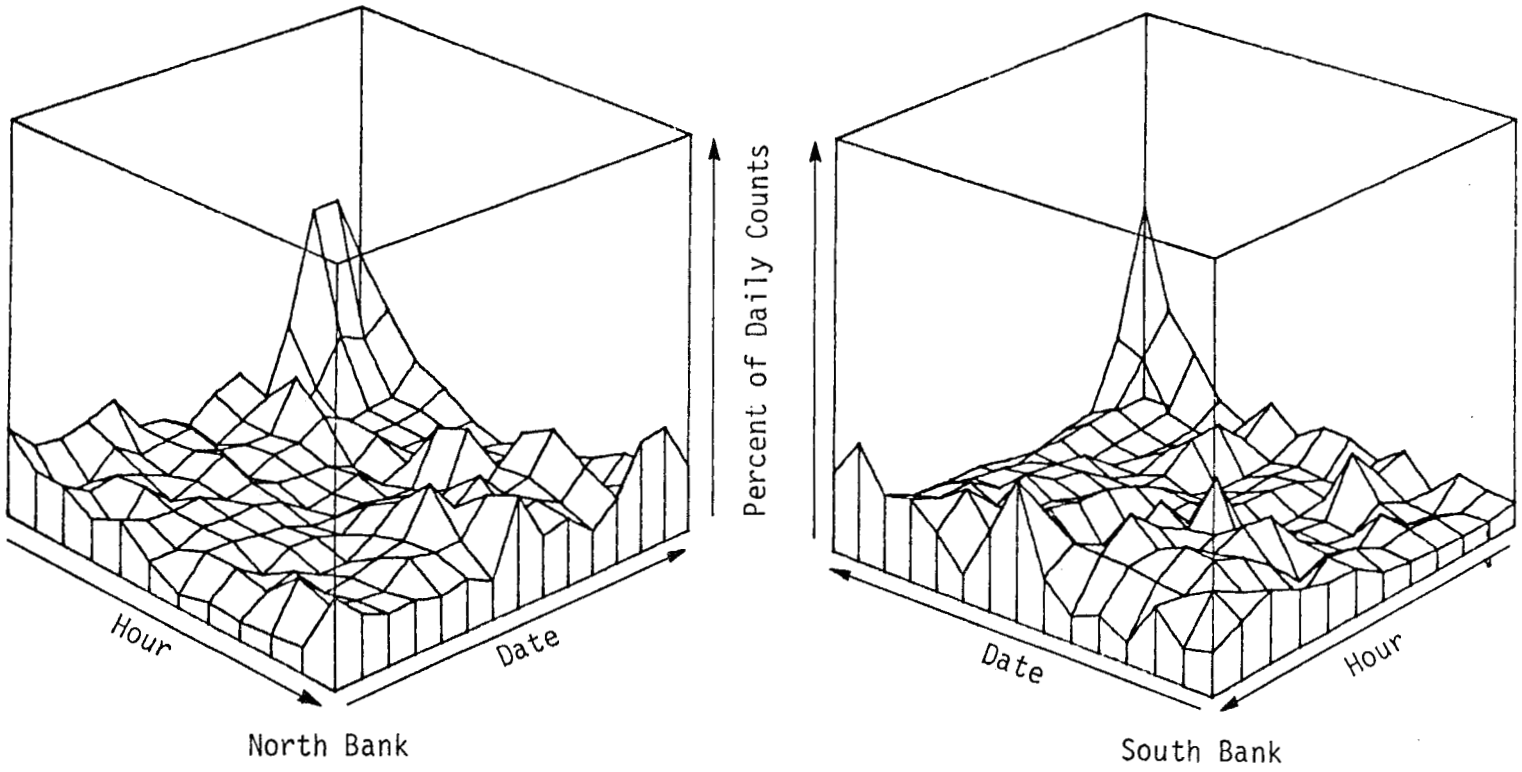

Figure 6. Kenai River side-scan sonar count hourly distribution over time (two-hour increments grouped in three-day time periods), 22 June - 4 August 1982. See Appendix Tables 6-9.

tion during the tail end of the run (54% of the counts from 28 July through 4 August occurred between 2300 hours and 0500 hours).

The peak daily passage rate of 93,779 fish at the sonar site occurred on 20 July, one day prior to the midpoint of the run (Table 5). Eighty percent of the escapement occurred in a period of 12 days (Table 6). All three data points are within the historical range; however, the entry pattern (expressed as total days for 80% of the run) is approximately 1.4 days shorter than the last 10 years (1972-1981). The bimodal appearance of the daily escapement can be partly attributed to the effects of the commercial fishery. No apparent differences in run timing were discerned between banks of the river at the sonar site (Appendix Tables 10 and 11).

Some differential in return timing to the tributaries was observed at weir sites, with increased distance from the sonar site resulting in a later 50% passage date. Respective 50% dates at Hidden Lake, Lower Russian Lake, and Quartz Creek were 27 July (Flagg 1982), 4 August (Nelson 1983), and 7 August (Flagg 1982).

A total of 1,787 sockeye salmon were captured in fishwheels (Appendix Table 12) and sampled for age, length, weight, and sex characteristics. An additional 523 sockeye salmon were taken in the Kenai River by gill net and similarly sampled. Age composition analysis showed very little change as the season progressed, ranging from 86.1% to 88.5% age 5_2 fish, and averaging 87.5% age 5_2 fish when weighted by numbers in the total escapement (Table 7). The age composition of fish captured by gill net was 75.9% age 5_2 (Appendix Table 13). Average length and weight data by age class and sex, and ratio of males to females sampled is presented in Appendix Tables 14 and 15.

Sonar counts attributed to pink salmon, coho salmon, and chinook salmon (Appendix Table 1) are considered minimum estimates. Run timing, counter limitations, and spawning site locations relative to the sonar site are factors discussed in Tarbox et al. (1981 and 1982) which influence accuracy of escapement estimates for these species. No additional mainstem pink salmon, coho salmon, and chinook salmon escapement estimates were made, but some additional information concerning tributary spawning populations is summarized in Table 4.

Sockeye salmon sonar counts appear to be a relatively accurate measure of escapement within the Kenai River drainage. The magnitude of the run (more than 600,000 fish) and short duration of entry are ideal for counting with the Bendix system. In addition, the shore-oriented migratory behavior of the late run probably results in most fish moving through the hydroacoustic beam. Finally, it is felt that only limited sockeye salmon spawning occurs below the sonar site.

Kasilof River

A total of 164,123 fish targets were counted at the Kasilof River sonar site from 10 June through 3 August 1982 (Appendix Table 16). The apportioned sockeye salmon count of 161,245 was expanded to account for fish migration into the system after 3 August, resulting in a total sockeye salmon escapement estimate of 180,239 (Table 1). This total exceeds the maximum escapement goal of 150,000 fish by 20%; 1982 was the fourth consecutive year in which the maximum escapement goal was exceeded. After FRED Division hatchery requirements were met

Table 6. Date of cumulative percent of late run sockeye salmon counts recorded in the Kenai River, 1968-1982[1].

Year	Date by 10% interval									
	10%	20%	30%	40%	50%	60%	70%	80%	90%	100%
1968	7/08	7/15	7/17	7/18	7/20	7/21	7/23	7/24	7/28	8/08
1969	6/20	6/21	6/23	6/27	7/01	7/06	7/12	7/19	7/28	8/09
1970	6/28	7/13	7/15	7/22	7/25	7/27	7/29	8/01	8/03	8/09
1972	7/17	7/21	7/22	7/23	7/24	7/25	7/26	7/27	7/29	8/01
1973	7/12	7/15	7/19	7/21	7/22	7/23	7/24	7/26	7/28	8/09
1974	7/04	7/08	7/12	7/16	7/17	7/21	7/25	7/28	8/02	8/07
1975	7/15	7/19	7/21	7/23	7/24	7/26	7/28	7/30	8/01	8/06
1976	7/09	7/15	7/19	7/20	7/20	7/21	7/22	7/24	7/28	8/25
1977	7/11	7/13	7/14	7/15	7/16	7/18	7/20	7/23	7/28	8/04
1978	7/16	7/17	7/17	7/18	7/19	7/20	7/21	7/26	8/01	8/23
1979	7/15	7/17	7/18	7/19	7/19	7/20	7/21	7/22	7/25	8/16
1980	7/17	7/17	7/17	7/18	7/19	7/19	7/20	7/21	7/22	9/05
1981	7/07	7/10	7/13	7/14	7/16	7/18	7/19	7/21	7/25	[2]
1982	7/18	7/19	7/19	7/20	7/21	7/23	7/25	7/27	7/29	[3]

[1] Date on which percentage level equaled or exceeded.

[2] Estimated 1% of the escapement occurred after 2 August.

[3] Estimated 4% of the escapement occurred after 4 August.

Table 7. Age composition of sockeye salmon collected in the Kenai River, 1969-1982.

Sample Period	Percent Composition by Age Class								Sample Size
	3_2	4_2	5_2	6_2	4_3	5_3	6_3	Other	
6/22-7/07/82	0.7	6.0	86.1			3.3	4.0		151
7/18-7/21/82	0.1	4.9	88.5			2.4	4.1		954
7/22-7/31/82		6.7	86.5	0.1		3.4	3.2		682
Seasonal Summary									
1969	tr	9.0	36.0	2.0	3.0	36.0	13.0	tr	382
1970	tr	10.0	17.0	tr	26.0	25.0	15.0	6.0	225
1971		8.0	39.0	1.0	3.0	38.0	11.0		168
1972		21.0	34.0			23.0	20.0		403
1973		5.0	68.0	1.0	1.0	8.0	16.0		632
1974	2.0	18.0	46.0		3.0	18.0	12.0		295
1975	2.0	10.0	36.0	2.0	4.0	31.0	14.0	1.0	163
1976	1.0	46.0	20.0		2.0	22.0	8.0	1.0	948
1977		6.0	76.0	1.0	tr	7.0	10.0		1,265
1978 [2]		2.5	86.7			4.9	5.4	tr	811
1979 [1]	tr	20.2	61.1			11.8	6.2	tr	601
1980 [1]		27.7	45.1			16.2	10.1	tr	715
1981 [1]		16.2	70.9			8.1	4.8		1,757
1982 [1]	0.1	5.8	87.5	tr		2.9	3.7		1,787

[1] 1979-1981 percentages weighted by total numbers of fish in escapement.

[2] 1978 weighted - Source: Bethe et al. (1980).

(11,571 fish used for egg takes, Flagg 1982), the remaining potential spawners numbered 168,668, or 12% over the maximum escapement goal.

Approximately 59% of the estimated sockeye salmon escapement was enumerated in clearwater tributaries of Tustumena Lake (Table 8). Estimated escapement number, and percent of total escapement (Table 9), calculated for each tributary, were within historical ranges. Weir counts for Bear and Glacier Flats Creeks were within spawner density ranges calculated by Namtvedt and presented in Tarbox et al. (1982).

The midpoint of the escapement counts occurred on 19 July (Table 5), six days later than the mean date (1968-1981), but within the historical range presented in Table 10. Eighty percent of the escapement occurred in 33 days, consistent with the trend (reported by Tarbox et al. 1982) towards increased run duration observed since 1979. No appreciable differences in run timing were discerned between fish migrating up each bank of the river (Table 5 and Appendix Tables 17 and 18).

Spawning ground tag recovery data are presented in Appendix Table 19, and summarized in Table 11 and Figure 7. When the number of tags recovered in each tributary is expressed as a percentage of the total recovered and grouped into 10 to 12-day tagging periods, some general trends are seen (note: tag recovery effort was variable; there were weirs on Bear and Glacier Flats Creeks). It appears that individual tributary returns generally overlap in timing at the sonar site, but peaks may vary slightly with a sequence of Nikolai, Bear, and Glacier Flats Creeks as the season progresses. However, additional data (particularly tag recoveries on un-weired tributaries) is necessary to draw firm conclusions about differential migratory timing by stocks in the river.

Tag recovery data were also examined to determine mean lake residence time of fish bound for Bear and Glacier Flats Creeks (Table 11). It appears that, as might be expected, travel time (residence time) was greater for fish bound for Glacier Flats Creek. There was also a tendency for residence time to be shorter as the season progressed. For example, Bear Creek sockeye salmon tagged 19-30 June averaged 32.3 days between the sonar site and weir while those fish tagged between 25 July and 3 August had a mean lake residence time of 18.5 days (Table 11).

Run timing, counter limitations, and spawning locations relative to the sonar site are factors which prevent escapement estimates for Kasilof River pink salmon, coho salmon, and chinook salmon. Weir counts of chinook salmon and coho salmon were, however, conducted by the Fisheries Rehabilitation, Enhancement, and Development (FRED) Division for Crooked Creek (a lower river tributary of the Kasilof River). A total of 9,226 chinook salmon of Crooked Creek origin were enumerated in 1982 (Flagg 1982). This included the sport fish harvest (2,787), weir counts (3,503 adults and 2,083 one-year jacks), and spawners below the weir (853). Of the 4,356 estimated adult spawners, over 50% are thought to be of hatchery origin. Information on run timing at the weir is available in Flagg (1982). The coho salmon count at the Crooked Creek weir was 1,144 (Flagg 1982).

Migratory behavior data analysis revealed bank, sector, and hourly distribution patterns similar to those exhibited over the previous three seasons (Tarbox et al. 1982). Preference of sockeye salmon for the north bank of the river (73% of

Table 8. Peak sockeye salmon escapement counts in seven index areas, Kasilof River drainage, 1976-1982[1].

Year	System							Total index count
	Nikolai	Crystal	Clear	Glacier Flat	Seepage	Moose	Bear	
1975	5,700	400	300	14,400[3]	3,700	3,300	27,700	55,500
1976	12,000	800	300	7,150[4]	800[5]	14,000	51,800[6]	86,800
1977	29,100	600	1,800	5,800[7]	800	16,600	58,000	112,700
1978	34,200	200	200	4,700[8]	1,100	15,900	43,400[9]	99,700
1979	19,100	500	400	5,600[10]	800	8,100	35,900[10]	70,400
1980	10,000	1,000	2,100	15,500[2] [11]	1,800	15,600	125,000[2] [12]	171,400
1981	36,000	860	2,978	40,071[2] [13]	3,376	12,968	75,117[2] [14]	171,400
1982	16,800	1,785	4,183	17,348[2] [15]	1,638	13,400	51,350[2] [16]	106,500

[1] Counts standardized to common unit for years in which the entire stream was not surveyed. Relative abundance per section (when the entire stream system was surveyed) was used to extrapolate for years when only a portion of the stream was surveyed. Numbers are rounded to the nearest hundred fish.
[2] FRED Division weir count.
[3] Includes 3,365 fish taken for artificial propagation.
[4] Includes 4,590 fish taken for artificial propagation.
[5] Includes 440 fish taken for artificial propagation.
[6] Includes 573 fish taken for artificial propagation.
[7] Includes 1,794 fish taken for artificial propagation.
[8] Includes 3,866 fish taken for artificial propagation.
[9] Includes 2,815 fish taken for artificial propagation.
[10] Includes 1,512 fish taken for artificial propagation.
[11] Includes 2,340 fish taken for artificial propagation.
[12] Includes 3,690 fish taken for artificial propagation.
[13] Includes 4,494 fish taken for artificial propagation.
[14] Includes 4,487 fish taken for artificial propagation.
[15] Includes 5,735 fish taken for artificial propagation.
[16] Includes 5,836 fish taken for artificial propagation.

Table 9. Distribution (percent)[1] of sockeye salmon in the major index tributary systems of Tustumena Lake, 1975-1982.

Year	Nikolai	Moose	Bear	Glacier Flat	Other
1975	10.2	5.9	49.9	25.9	8.1
1976	13.8	16.2	59.8	8.2	2.0
1977	25.8	14.7	51.5	5.1	2.9
1978	34.3	15.9	43.5	4.7	1.6
1979	27.1	11.5	51.0	7.9	2.5
1980	5.8	9.1	73.1	9.0	3.0
1981	21.0	7.6	43.8	23.3	4.3
1982	15.8	12.6	48.2	16.3	7.1

[1] Percent of total index count.

Table 10. Date of cumulative percent of sockeye salmon counts recorded in the Kasilof River, 1968-1982[1].

Year	Date by 10% Interval									
	10%	20%	30%	40%	50%	60%	70%	80%	90%	100%
1968	7/04	7/06	7/08	7/11	7/12	7/14	7/17	7/20	7/23	7/31
1969	6/25	6/25	6/30	7/02	7/02	7/06	7/11	7/18	7/25	8/09
1970	6/27	7/03	7/07	7/09	7/12	7/14	7/17	7/23	7/27	8/06
1972	7/15	7/21	7/22	7/22	7/23	7/23	7/24	7/24	7/25	8/03
1973	7/04	7/09	7/11	7/13	7/15	7/18	7/20	7/23	7/26	8/05
1974	7/04	7/05	7/06	7/08	7/11	7/13	7/17	7/23	7/28	8/07
1975	7/05	7/07	7/09	7/13	7/16	7/19	7/21	7/24	7/28	8/07
1976	7/06	7/07	7/10	7/13	7/16	7/19	7/20	7/22	7/28	8/09
1977	7/04	7/08	7/11	7/12	7/14	7/15	7/17	7/20	7/25	8/04
1978	6/30	7/03	7/06	7/09	7/16	7/17	7/17	7/18	7/20	8/06
1979	6/28	7/02	7/05	7/07	7/12	7/15	7/19	7/23	7/27	8/14
1980	6/30	7/02	7/05	7/11	7/16	7/18	7/21	7/25	8/03	8/14
1981	6/18	6/24	6/28	7/01	7/04	7/07	7/10	7/14	7/20	[2]
1982	7/03	7/13	7/16	7/17	7/19	7/20	7/21	7/27	[3]	

[1] Date on which the percentage level was equaled or exceeded.

[2] An estimated 2% of the escapement occurred after 31 July.

[3] An estimated 11% of the escapement occurred after 3 August.

Table 11. Tagging period, number of tags recovered, and mean residence time in Tustumena Lake of sockeye salmon bound for Bear and Glacier Flats Creeks, 1982[1].

Tributary	Tagging Period	Tags Recovered	Mean Residence Time in Lake, Days
Bear Creek	6/19 - 6/30	3	32.3
	7/01 - 7/12	26	25.7
	7/13 - 7/24	154	21.7
	7/25 - 8/03	8	18.5
Glacier Flats Creek	7/01 - 7/12	6	36.2
	7/13 - 7/24	54	28.3
	7/25 - 8/03	17	21.7

[1] Fish tagged at the Kasilof River slackwater sonar site.

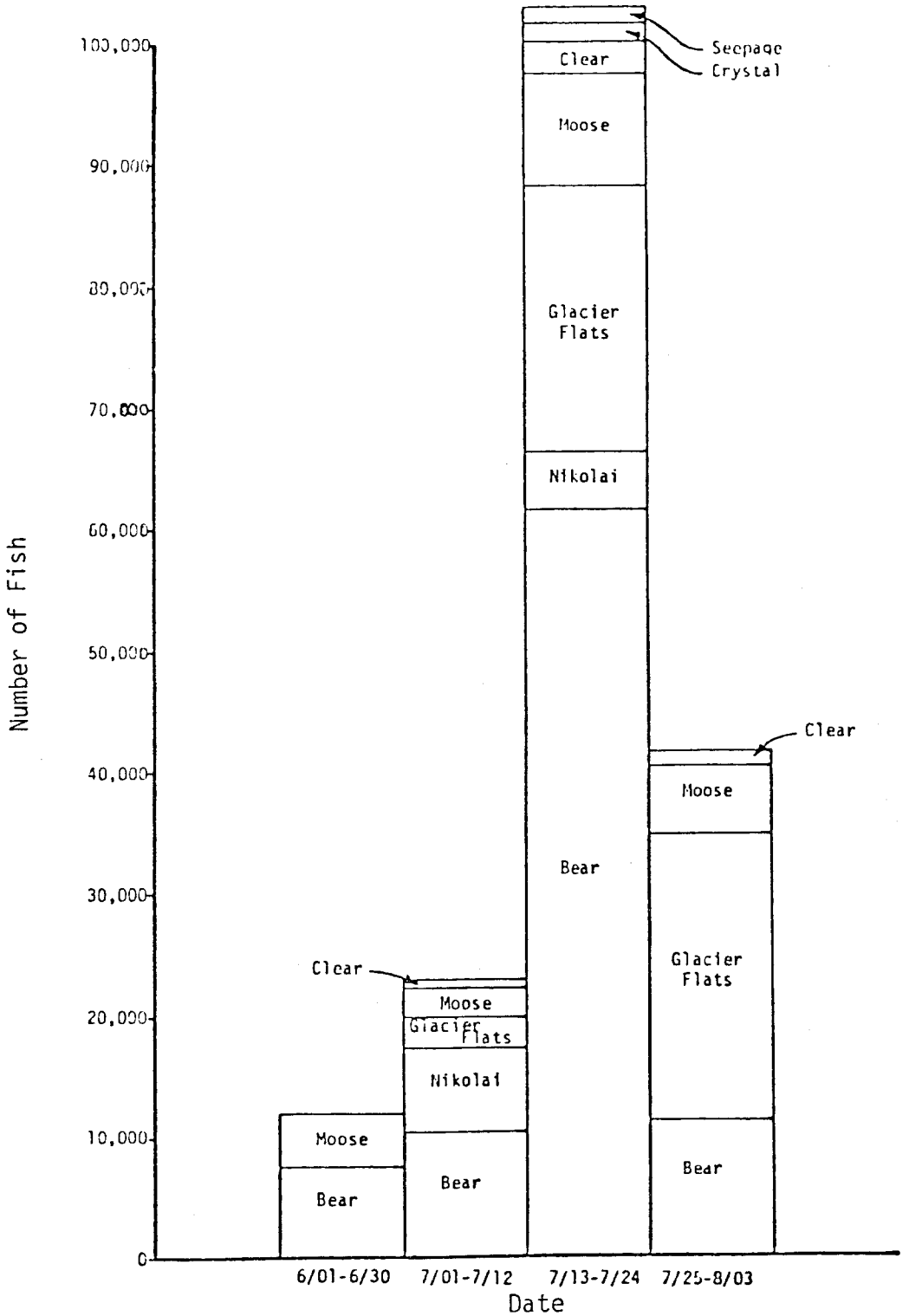

Figure 7. Percent of total tags recovered in Tustumena Lake tributaries (grouped by date of tagging at the sonar site) expressed in number of fish enumerated by sonar during each tagging period.

the total) was the only substantial deviation from migratory behavior patterns established since 1979 (Table 5). Seasonal changes in sector distribution on the north bank (counts recorded in sectors 6 through 12 averaged 53% of the total counts prior to and after 10 July) coincided with increased run strength (Figure 8; 80% of the total counts occurred after 10 July). The south-bank counts were distributed relatively equally in inner and outer sectors (average 40% and 54% in sectors 1-4 and 9-12, respectively) before increased daily passage rates which occurred around 15 July. After this date, the majority (57%) of the fish counted were within 4.2 m from shore.

Hourly distribution of fish passage was somewhat higher near both banks between 2300 hours and 0800 hours for the first half of the season (Figure 9). However, during the main portion of the run in mid-July, counts were more evenly distributed throughout the day with a slight preference for the time period between 0500 hours and 1000 hours.

A total of 2,565 salmon were captured in fishwheels at the Kasilof River sonar site from 10 June through 3 August 1982 (Appendix Table 28). Age composition of the sockeye salmon sampled was primarily four-year-old (30.6% age 4_2) and five-year-old (54.4% age 5_2) fish (Table 12). Average length and weight data by age class, and sex and ratio of males to females are presented in Appendix Tables 29 and 30.

The accuracy of Kasilof River sockeye salmon escapement estimates has been suspect due to apparent offshore migration at the sonar site in previous years. To date, efforts made to quantify the magnitude of mid-river migration to assess the extent of undercounting have been unsuccessful. Data from other Cook Inlet sockeye salmon sonar counting operations have indicated a definite inshore migration tendency in glacial systems but suggest that water velocity and bottom topography influence fish behavior and consequently the manner in which fish migrate over the sonar substrate.

It is apparent from visual (oscilloscope) monitoring and recorded counts at the Kasilof River sonar site that fish cross the substrate in all sectors. The counters have been adjusted manually to compensate for undercounting in the middle sectors (4 through 8) by overcounting in the inner and outer sectors, giving the appearance of a substantial offshore migration in the sector data. However, visual monitoring of fish crossing the substrate, leads to a different interpretation. It appears that the decline in crossings by sector with increased distance from shore has been masked by undercounting compensation, and that the degree of compensation increases with distance from shore (primarily in sectors 10-12). The results suggest that:

1) Sector distribution was highest inshore and gradually decreased through sector 12;

2) Because some fish were counted in sector 12, there is presumed to be some offshore migration; and

3) The method by which the counter was adjusted to compensate for undercounting in the middle sectors resulted in an accurate escapement estimate for fish passing over the substrate.

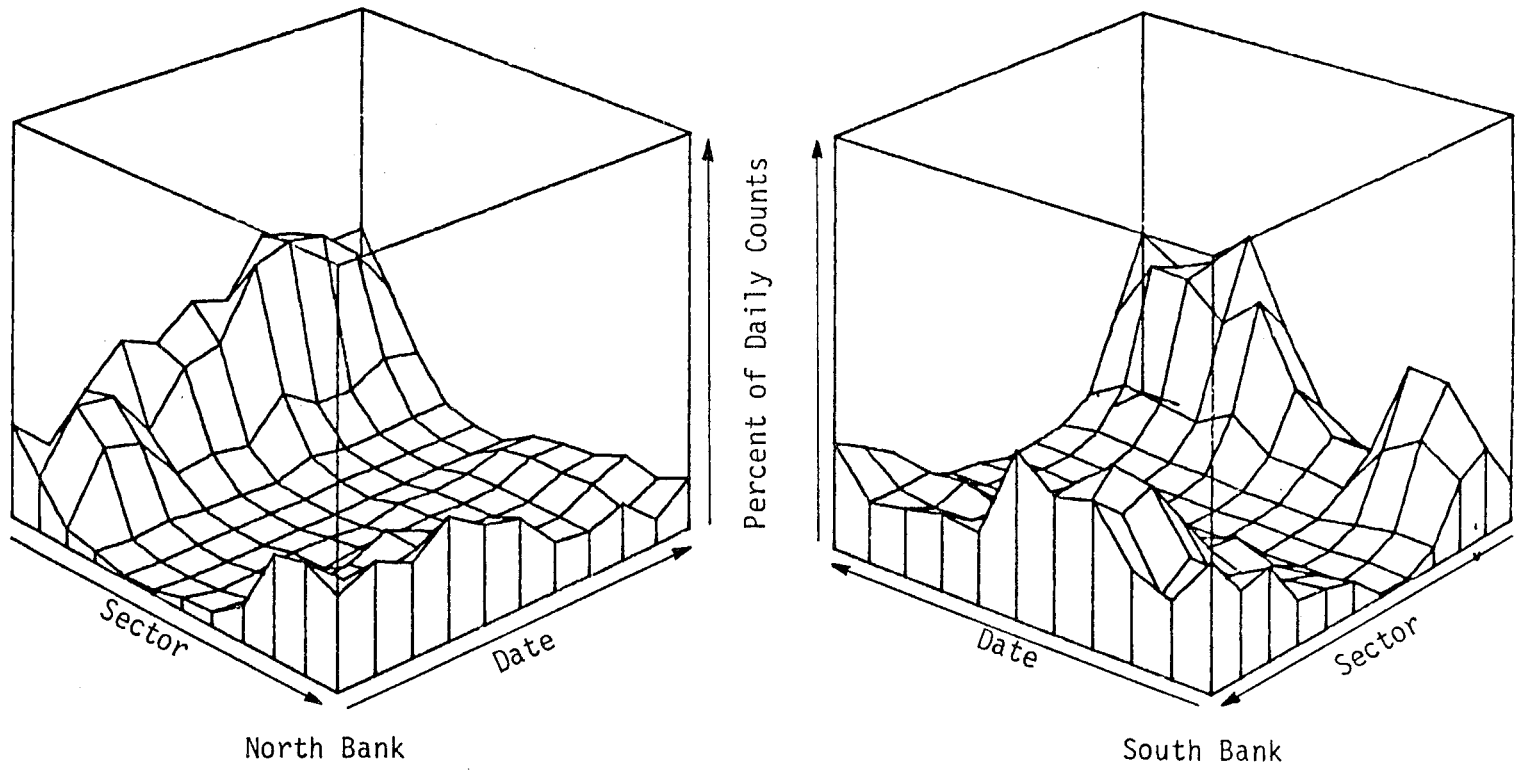

Figure 8. Kasilof River side-scan sonar count sector distribution over time (grouped in five-day time periods), 10 June - 3 August 1982. See Appendix Tables 20-23.

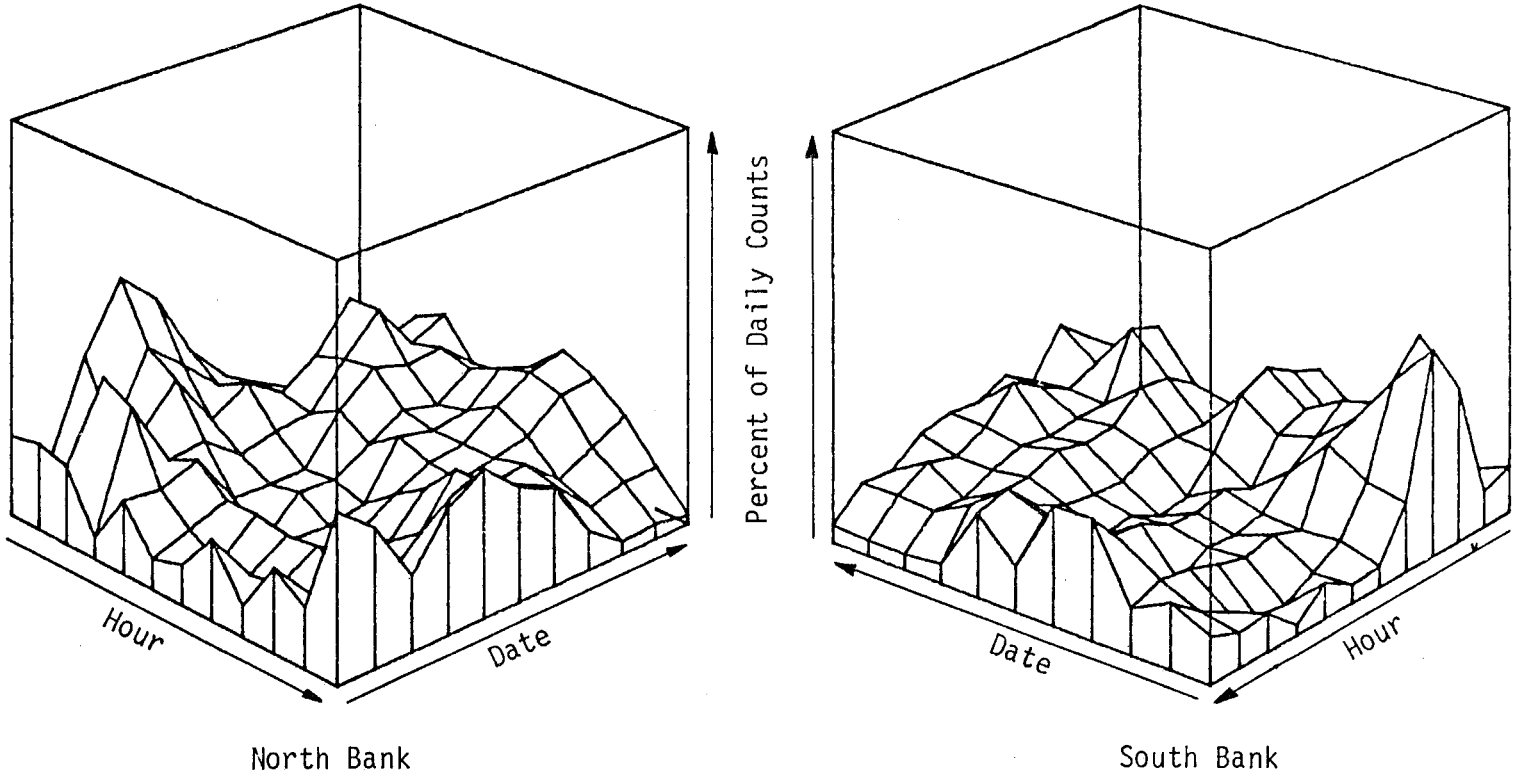

Figure 9. Kasilof River side-scan sonar count hourly distribution over time (two-hour increments grouped in five-day time periods), 10 June - 3 August 1982. See Appendix Tables 24-27.

Table 12. Age composition of sockeye salmon collected in the Kasilof River, 1969-1982.

Year	Percent Composition by Age Class								Sample
	3_2	4_2	5_2	6_2	4_3	5_3	6_3	Other	
1969		14.0	39.0	1.0		30.0	16.0		399
1970	tr	32.0	37.0	2.0		16.0	11.0	1.0	297
1971		6.0	69.0			8.0	16.0		153
1972	tr	42.0	36.0	1.0	tr	3.0	18.0	tr	668
1973		20.0	57.0			19.0	4.0		374
1974		35.0	59.0		tr	4.0	2.0		254
1975	1.0	29.0	7.0			58.0	4.0	1.0	931
1976	tr	32.0	20.0		tr	35.0	12.0		755
1977	tr	30.0	30.0		1.0	28.0	11.0		1,209
1978		42.0	35.0			14.0	9.0		967
1979[1]		52.2	37.2		tr	8.4	1.7	tr	590
1980[1]		58.7	27.8			8.0	4.5	1.0	899
1981[1]		30.2	62.2			6.0	1.6		1,479
1982	tr	30.6	54.4		tr	9.3	4.7		1,813

[1] 1979-1981 percentages weighted by total numbers in escapement.

To test the last statement, daily oscilloscope counts were expanded to correct for intervals not monitored and totaled for the season. In effect, the oscilloscope was used as an underwater counting tower. Daily counts generated by expansion of oscilloscope counts (season total - 159,655), and daily sonar counts (season total - 163,845) are presented in Appendix Table 31. Statistical analysis indicates no difference ($\alpha = 0.05$) between the two estimates generated for each bank.

Crescent River

A total of 49,202 fish targets were enumerated in the Crescent River from 1 July through 31 July 1982 (Appendix Table 32). The apportioned sockeye salmon count of 49,091 was expanded to 58,957 to account for fish passing the sonar site after 31 July (Table 1). This escapement estimate exceeded the escapement goal of 50,000 established in 1979 (Tarbox et al. 1982) by 18%.

As in past years, the majority (97%) of sockeye salmon migrated upstream within 3 m of shore at the sonar site (Figure 10). A slightly more offshore distribution was observed in both banks at the beginning of the season when the water velocity was at a minimum level and numbers of fish were low (it should be noted that the even distribution recorded on the north bank from 9 to 10 July and the south bank from 11 to 13 July was an artifact, introduced to correct for days when sector and hourly dat were not available). Peaks in hourly passage rate occurred from 1300 hours through 2000 hours on both banks (Figure 11).

The peak daily passage of 4,906 fish occurred on 20 July (Appendix Tables 40 and 41), one day prior to the midpoint of the run (Table 5), but on the same day as the average 50% passage date for the previous three years (Tarbox et al. 1982). Eighty percent of the run passed the sonar counters in 22 days (Table 13).

A total of 743 sockeye salmon were captured for age-weight-length analysis (Appendix Table 43). As in past years, the sample was primarily five-year-old (79.2% age 5_2) fish (Table 14). Average length and weight by sex and age class, and the ratio of males to females for sockeye salmon sampled are presented in Appendix Tables 44 and 45.

Sockeye salmon sonar counts appear to be a relatively accurate measure of escapement into Crescent Lake. River conditions (notably velocity) dictate inshore migration, placing fish within the hydroacoustic beam. Visual counts during the day were used to adjust sonar counters, and provide escapement estimates for periods (9-10 July on the north bank, 11-13 July on the south bank) in 1982 when transducer problems affected sonar accuracy.

Susitna River

Salmon escapement estimates by species reported for 1982 are a compilation of data gathered for the Susitna Hydroelectric Project (ADF&G 1983) as well as information from Upper Cook Inlet sonar operations at Susitna Station.

Data from sonar and fishwheel operations at Susitna Station over the past five years have provided some evidence concerning the factors which influence the accuracy of sonar counts at this site. The evidence (along with research performed for the Susitna Hydroelectric Project and Sport Fish Division) suggests

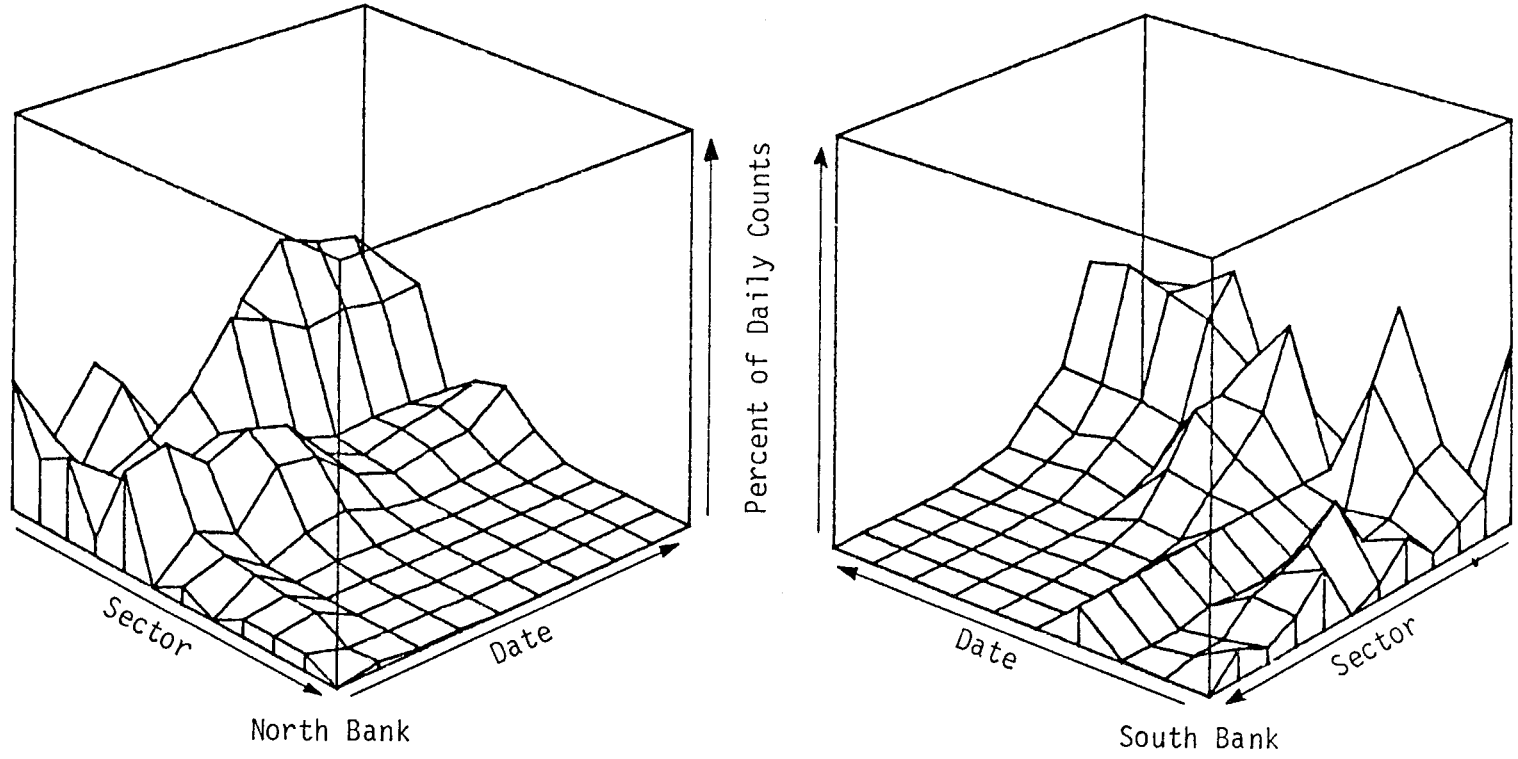

Figure 10. Crescent River side-scan sonar count sector distribution over time (grouped in three-day time periods), 1 July - 31 July 1982. See Appendix Tables 33-36.

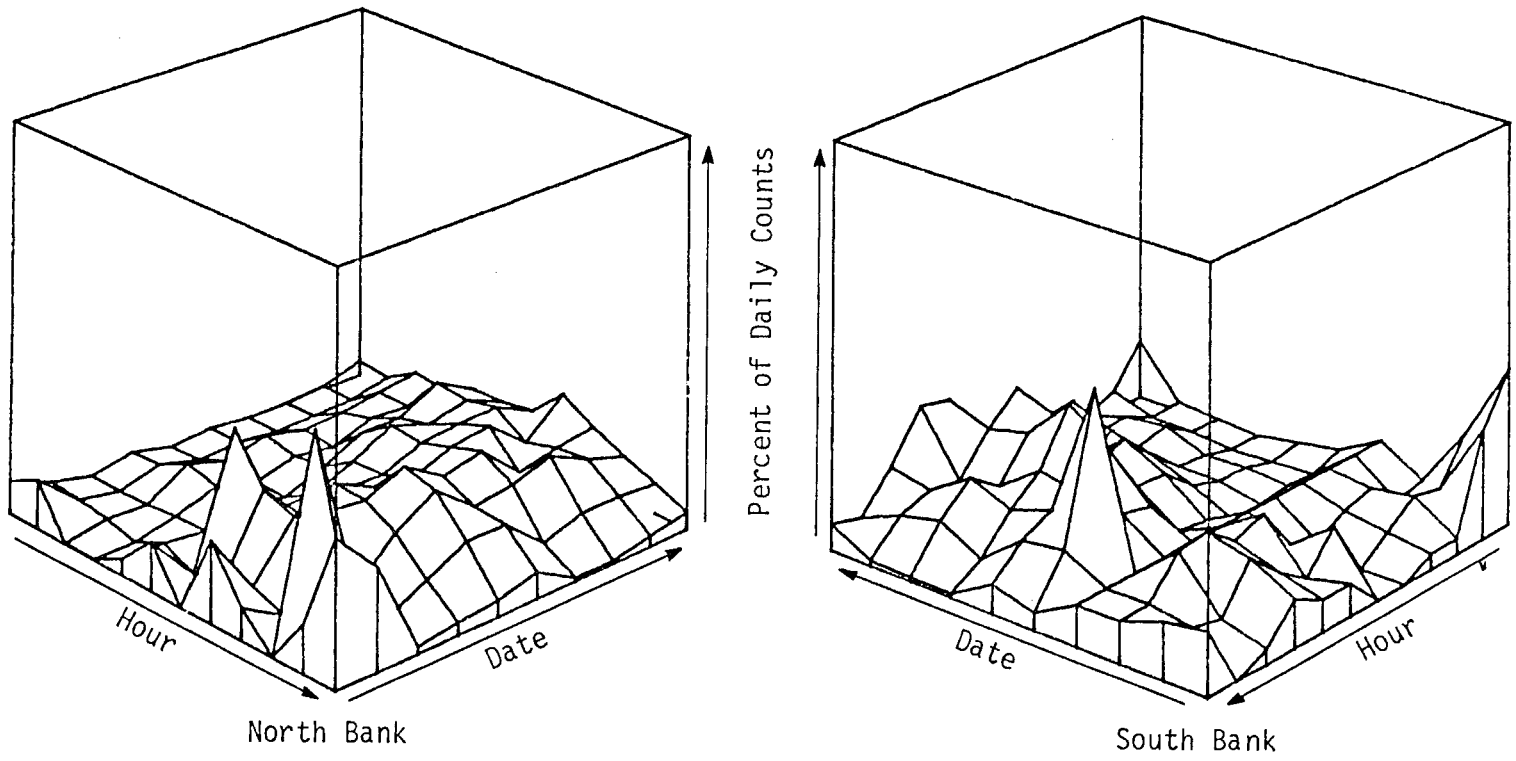

Figure 11. Crescent River side-scan sonar count hourly distribution over time (two-hour increments grouped in three-day time periods), 1 July - 31 July 1982. See Appendix Tables 37-40.

Table 13. Date of cumulative percent of sockeye salmon counts recorded in the Crescent River, 1979-1982[1].

	Date by 10% Intervals									
Year	10%	20%	30%	40%	50%	60%	70%	80%	90%	100%
1979	7/09	7/11	7/12	7/14	7/17	7/20	7/22	7/24	7/31	8/13
1980	7/12	7/18	7/20	7/21	7/22	7/24	7/26	7/29	8/03	8/15
1981	7/06	7/12	7/16	7/19	7/21	7/22	7/24	7/29	8/04	[2]
1982	7/11	7/14	7/18	7/20	7/21	7/23	7/25	7/28	[3]	

[1] Date on which the percentage level was equaled or exceeded.

[2] An estimated 3% of the escapement occurred after 9 August.

[3] An estimated 11% of the escapement occurred after 31 July.

Table 14. Age composition of sockeye salmon collected in the Crescent River, 1979-1982.

Year	Percent Composition by Age Class								Sample Size
	3_2	4_2	5_2	6_2	4_3	5_3	6_3	Other	
1979[1]	tr	27.8	70.1			tr	tr	tr	643
1980[1]		6.5	86.9			2.9	1.6	2.1	511
1981[1]		8.2	32.1			9.6	49.9	tr	1,117
1982		12.9	79.2	.10		0.8	7.0		711

[1] Percentages weighted by total numbers in escapement.

that chum salmon, coho salmon, and chinook salmon do not exhibit strong inshore orientation at Susitna Station, and are, therefore, only partially subject to sonar enumeration and fishwheel capture. Also, river conditions influence migratory behavior of generally shore-oriented species (sockeye salmon and pink salmon); specifically, higher water levels and increased velocity tend to force fish inshore and to the bottom which increases their exposure to the hydroacoustic beam and fishwheel capture. The difference in migratory behavior between species further results in problems in apportioning sonar counts based on fishwheel catches. That is, fish that cross the substrate in the outer sectors may not be subject to fishwheel capture, resulting in apportioned counts being biased toward those species which exhibit the strongest inshore preference. The degree to which these factors affect the accuracy of apportioned sonar counts is dependent on total count distribution and run strength of each species relative to the others.

In 1982 several problems occurred which greatly influenced escapement estimates at Susitna Station. The loss of the west-bank counter for 11 days (25 July - 4 August) during the peak of salmon escapement resulted in low estimates for all species. There were also siting problems which contributed to low estimates (in comparison to Yentna Station) during periods when the west bank counter was operational. General field and oscilloscope observations indicated that both west-bank sites exhibited some degree of substrate flutter and target loss throughout the periods of operation. This evidence suggested a drop-off in bottom contour near the end of the substrate which generally results in a weak and fluctuating target. Attempts to stabilize the substrate are effective only during stable water-level periods which occur infrequently on the Susitna River. The net result of the inability to stabilize the target was probably a loss of data due to slight missaiming of the transducer which occurred as the substrate changed configuration during periods of fluctuating water levels. Additional sites were explored in the vicinity of Susitna Station; however, the chosen sites incorporated the best combination of site characteristics available.

The east-bank site, although stable and conducive to sonar substrate placement, exhibited sector distribution problems not seen in previous years. Although increased river velocity in mid-season improved the distribution, it appears that substantial offshore migration outside the counting range of the sonar did occur. Apportioning of counts was further complicated by fishwheel selectivity, as discussed above.

Accuracy of salmon escapement estimates presented for the Susitna River in 1982 is discussed in relation to the above information in addition to potential problems associated with Susitna Hydroelectric Project estimates. In all cases, estimates are not considered absolute escapement counts for the river due to inherent problems in all estimation techniques, and distribution of spawners into tributaries below and between sites.

Sockeye Salmon:

An escapement range of 215,856 to 265,332 sockeye salmon was estimated for the Susitna River in 1982 (Table 1). The lower value combines sonar counts from Susitna Station west bank (Appendix Table 46) and the mark-recapture estimate for Sunshine Station (Appendix Table 47). The upper end of the range combines

Yentna Station sonar counts (Appendix Table 47) and the same tagging estimate from Sunshine Station. The range exceeds the minimum escapement goal of 200,000 fish established in 1975 (Tarbox et al. 1982) and is comparable to historic escapement estimates.

Additional sockeye salmon escapement estimates for the mainstem Susitna River above Susitna Station made for the Susitna Hydroelectric Project are presented in Appendix Table 47.

Spawning-ground surveys in index areas accounted for 60,845 sockeye salmon (Table 15), the highest count recorded since the initiation of index surveys in 1972. Counts within most tributaries were generally comparable in magnitude with previous years. Exceptions, notably record counts at Chelatna Lake and the west fork of the Yentna River, may have been a result of excellent counting conditions in these normally glacially occluded tributaries. Survey conditions in general were excellent due to low water throughout the drainage. Results from additional spawning-ground surveys conducted for the Susitna Hydroelectric Project and other projects in the Susitna River drainage are presented in Table 16.

Analysis of the migratory behavior of sockeye salmon moving past the west-bank counter indicated most fish counted exhibited inshore preference during the period from 1 through 24 July (Figure 12). Movement of the site downriver (4 August) resulted in an even distribution offshore of fish targets counted. Hourly distribution of counts was relatively even throughout the day and consistent as the season progressed (Figure 13).

Evaluation of sector distribution information from east-bank sonar counts indicated a poor inshore orientation throughout the period of enumeration (greater than 60% of the counts occurred in sectors 6-12). As on the west bank, hourly counts were evenly distributed on a daily basis.

The midpoint of sockeye salmon sonar counts for the west and east banks was 21 July and 27 July, respectively (Table 5). Fishwheel catch midpoints were 23 July for the west bank and 26 July for the east bank (Appendix Tables 56 and 57). The later date on the west bank (compared to sonar counts) resulted from removing the gear during the height of the sockeye salmon run (equipment was removed on 25 July when the bank caved in). The midpoint of the run (both banks combined) calculated for the Susitna Hydroelectric Project (ADF&G 1983) was 24 July.

A total of 1,032 sockeye salmon were sampled for age, length, sex, and weight characteristics at the Susitna Station sonar site. The sockeye salmon sampled consisted of 59.6% age 5_2 fish and 23.5% age 4_2 fish (Table 17). Average length and weight data compiled by sex and age class, and ratio of males to females are presented in Appendix Tables 58 and 59.

Sockeye salmon estimates from Yentna Station were generally comparable to Susitna Station west bank for the period when the upper site was in operation, as they were for the entire 1981 run (Tarbox et al. 1982; ADF&G 1982). The Sunshine Station mark/recapture estimate was high in comparison to the sonar count at that site; however, the counter was not working properly during a portion of the run (Barrett, pers. comm.). The mark/recapture estimate in 1981 was approximately 48% higher than the apportioned sonar count. Also, there was some drop

Table 15. Peak sockeye salmon escapement counts in Susitna River tributary index areas, 1972-1982.

Index Area	Year										
	1972	1973	1974	1975	1976	1977	1978	1979	1980	1981	1982
Byers Lake	[1]	[1]	[1]	[1]	50	300	[1]	[1]	[1]	275	[1]
Talachulitna River[2]	6,501	12,362	6,186	5,105	13,210	25,935	14,308	11,696	21,125	9,926	14,550
Trinity-Movie Lakes	350	75	0	0	42	186	150	195	200	500	138
Shell Lake	640	295	20	251	344	247	127	1,480	5,800	6,050	3,150
Hewitt-Whiskey Lakes[3]	1,197	1,073	1,047	751	2,289	792	1,998	1,205	3,250	9,850	2,675
Red Salmon Lake	[1]	250	160	142	376	372	235	480	1,100	1,212	1,000
Puntilla Lake	[1]	[1]	[1]	[1]	[1]	2,100	1,105	90	550	200	[1]
West Fork Yentna River	[1]	[1]	[1]	[1]	550	4,000	6,000	456[4]	5,500	9,000	10,340
Chelatna Lake[5]	57	11	0	4	[4]	171	0	0[4]	4,120	14,000	23,180
Fish Lake	107	251	95	187	82	611	299	100[6]	2,100	176	280
Clear Creek[7] [8]	[1]	[1]	[1]	[1]	30	75	310	365	320	450	2,060
Stephan-Murder Lakes[9]	368	255	115	261	462	539	1,142	140	220	475	452
Larson Lake	300	20	19	63	85	330	117	160	[1]	4,600	2,150
Swan Lake[10]	302	310	386	465	516	827	917	40[6]	[4]	350	760
Red Shirt Lake[11]	200	47	1	159	215	43	13	645	650	505	100
Susitna River Drainage Total Index Area Escapement[12]	10,000	15,000	8,000	7,400	18,400	36,500	26,800	17,100	44,900	58,000	60,800

[1] No counts available.
[2] Includes counts from Upper Talachulitna Creek, Talachulitna Lake, Talachulitna Creek, North and South Judd Springs, Judd Spring No. 2, Judd Lake, and Upper Talachulitna River index areas.
[3] Includes Hewitt Lake, Whiskey Lake, Hewitt Creek, Huckleberry Creek, and Christmas Tree Creek index areas.
[4] Glacially occluded.
[5] Includes Coffee Creek and Snowslide Creek index areas.
[6] Low visibility-turbid water.
[7] Known as Chunilna River in past reports.
[8] Includes Mama and Papa Bear Lakes index areas.
[9] Includes Prairie Creek index areas.
[10] Includes Slim Creek and "T" Creek index areas.
[11] Includes Role Jo Creek index area.
[12] Rounded to the nearest 100 fish.

Table 16. Salmon escapement counts in Susitna River tributaries, 1982.

Tributary	Peak Count or Escapement Estimate				
	Sockeye	Pink	Chum	Coho	Chinook
Larson Lake		5,000[1]			
Fish Lake		6,300[4]	3[4]	41[4]	
West Fork Yentna River		2,100[1]			
Talachulitna River		14,000[1]			3,101[2]
Red Salmon Lake			1,000[1]		
Alexander Creek					4,798[2] [3]
Deshka River					20,000[2] [3]
Lake Creek					5,051[2] [3]
Bunco Creek					198[4]
Byers Creek		1,110[4]	417[4]	56[4]	7[4]
Chase Creek		107[4]		36[4]	15[4]
Cheechako Creek					16[4]
Chinook Creek					5[4]
Chulitna River					863[4]
Clear Creek		52,100[1]	7,500[1]	2,500[1]	982[4]
4th of July Creek		702[4]	191[4]	4[4]	56[4]
Gold Creek		11[4]		1[4]	21[4]
Goose Creek					140[4]
Honolulu Creek					27[4]
Indian River		738[4]	1,346[4]	101[4]	1,053[4]
Jack Long Creek		21[4]	3[4]	1[4]	2[4]
Kashwitna River[5]					156[4]
Lane Creek		640[4]	11[4]	5[4]	47[4]
Little Willow Creek					316[4]
Montana Creek					887[4]
Portage Creek	4[4]	169[4]	153[4]	88[4]	1,253[4]
Prairie Creek					3,844[4]
Sheep Creek					527[4]
Spink Creek					12[4]
Troublesome Creek		174[1]	585[4]	39[4]	36[4]
Willow Creek					821[4]
Fish Creek		5,875[4]	16[4]	191[4]	
Whiskers Creek		138[4]		176[4]	
Lower McKenzie Creek		23[4]		133[4]	
McKenzie Creek		17[4]			
Little Portage Creek		140[4]	31[4]	8[4]	
5th of July Creek		113[4]	1[4]		3[4]
Skull Creek		12[4]	1[4]		
Sherman Creek		24[4]			3[4]
Susitna River[6]	605[4]	506[4]	2,238[4]	53[4]	1[4]
Cache Creek			68[4]	2[4]	
Answer Creek				24[4]	
Question Creek				369[4]	
Unnamed Creek				8[4]	
Slash Creek				6[4]	
Gash Creek				74[4]	
Total	609	90,024	13,564	3,863	44,241[8]

-Continued-

Table 16. Salmon escapement counts in Susitna River tributaries, 1982 (continued).

---

[1] UCI sockeye spawning ground surveys.

[2] Sport Fish Division surveys (Delaney and Hepler 1983).

[3] Includes sport fish harvest estimate (Delaney and Hepler 1983).

[4] Counts reported in ADF&G 1983.

[5] North Fork only.

[6] Sloughs along the mainstem above the confluence of the Susitna, Chulitna, and Talkeetna Rivers. For site locations, see ADF&G 1983.

[7] River mile 97.8.

[8] Includes an estimated 7,726 fish harvested in Alexander and Lake Creeks and the Deshka River (Delaney and Hepler 1983).

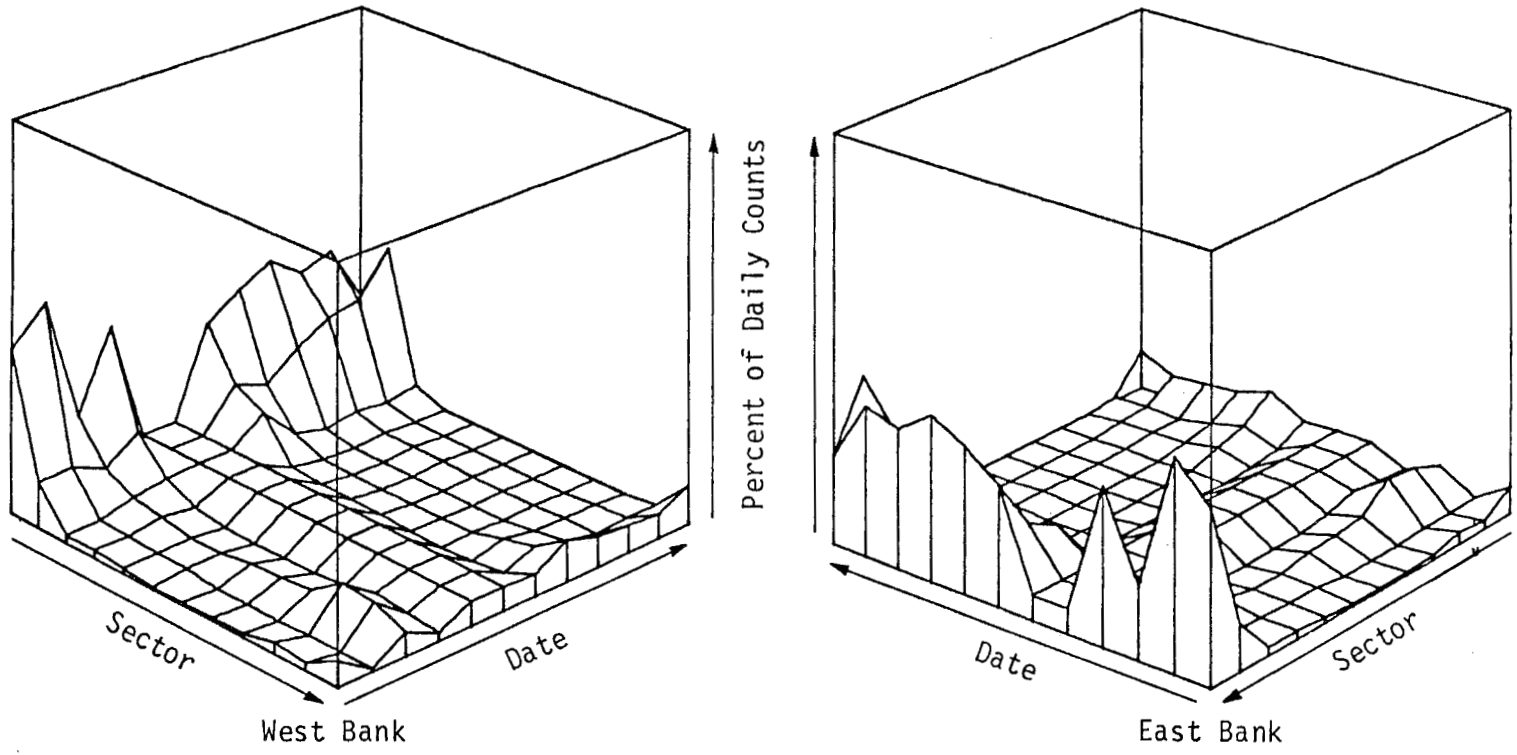

Figure 12. Susitna Station side-scan sonar count sector distribution over time (grouped in six-day time periods), 1 July - 5 September 1982. See Appendix Tables 49-51.

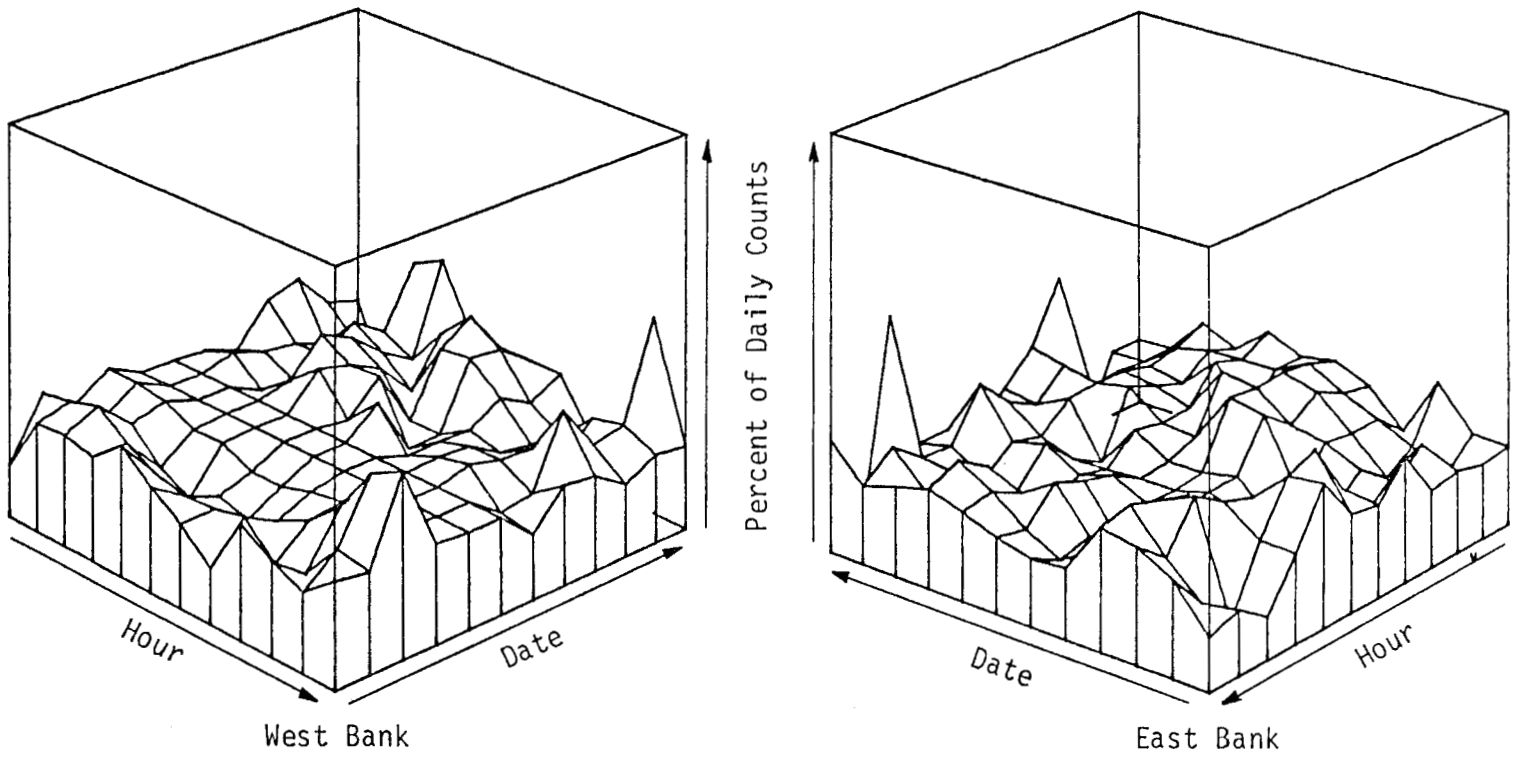

Figure 13. Susitna Station side-scan sonar count hourly distribution over time (two-hour increments grouped in six-day time periods), 1 July - 5 September 1982. See Appendix Tables 52-55.

Table 17. Age composition of sockeye salmon collected in the Susitna River, 1975-1982.

Year	Percent Composition by Age Class								Sample Size
	3_2	4_2	5_2	6_2	4_3	5_3	6_3	Other	
1975[2]		57.8	38.4		tr	2.8	tr		498
1976[2]		47.9	49.4	tr		1.7	tr		1,046
1977[2]		22.0	73.8	tr	tr	3.5	tr		1,450
1978	3.7	48.2	36.0	tr	8.0	2.5	1.5		767
1979[1]	4.5	61.0	20.6	tr	1.4	5.3	1.0	3.7	830
1980[1]		50.0	36.2			4.7	5.2	3.9	823
1981[1]		8.9	83.0			3.0	4.5	tr	2,233
1982	2.3	23.5	59.6		0.5	3.3	10.7		1,032

[1] Percentages weighted by total numbers in escapement.

[2] Precocious males, age 3_2, were excluded from the analysis since a representative sample of this age class was not taken each year.

out of sockeye salmon into tributary spawning streams between Susitna Station and Sunshine Station. Despite these problems, it appears that the total reported estimate is probably a reasonable population index and comparable to previous Susitna Station data.

Pink Salmon:

An estimate of 926,807 pink salmon was obtained for 1982 (Table 18), composed of apportioned sonar counts from Yentna Station and the east bank of Susitna Station (Appendix Tables 47 and 60). Escapement goals for pink salmon have not been established for the Susitna River; however, the 1982 total was less than expected relative to the parent year estimate. The escapement estimate did, however, reflect the trend in this stock for high returns in even-numbered years. Results of enumeration efforts at additional Susitna Hydroelectric sites are presented in Appendix Table 47.

Spawning-ground survey estimates accounted for 90,024 pink salmon in selected streams within the drainage (Table 16). Comprehensive surveys were conducted on tributaries and side sloughs of the Susitna River above Talkeetna (ADF&G 1983), but remaining counts were obtained in conjunction with surveys of sockeye salmon spawning grounds and may not reflect pink salmon peak spawning periods or major spawning grounds.

Sector and hourly distribution data are unavailable for the west bank counter which was not functional during the period when most pink salmon migrated past Susitna Station (based on timing of Yentna River and Susitna Station east-bank sonar counts and fishwheel catches). An average of 61% of the east-bank counts recorded during the period of high pink salmon escapement (19 July through 4 August) occurred over the offshore half of the substrate. Hourly counts for the same period were evenly distributed throughout the day.

Peak daily pink salmon counts at Yentna Station and Susitna Station east-bank sonar occurred on 29 July (Appendix Table 60 and ADF&G 1983), which was also the midpoint of the respective runs (Yentna Station timing based on fishwheel catch data and calculated to be one day later than the Susitna Station west-bank fishwheel). Compared to previous years, 1982 run timing data support a trend of an approximate one week difference in run timing between even and odd years (Table 5 and Tarbox et al. 1981).

A total of 308 pink salmon were sampled for length, weight, and sex data at Susitna Station. Results are presented in Appendix Tables 61 and 62.

Pink salmon estimates on the west bank at Susitna Station were not made because the system was inoperative during the majority of the run. Yentna Station counts appear to be high compared the west bank of Susitna Station based on counts for the period from 1 July to 24 July and 1981 results (Tarbox et al. 1982; ADF&G 1982). The Yentna Station estimate may, however, be a more accurate index of actual escapement because of better coverage (two substrates) on a smaller river and better site characteristics. It is unknown how Susitna Station east-bank counts were affected by offshore distribution (tendency to lower the estimate) and fishwheel selectivity (tendency to increase the estimate). The mark/recapture estimate at Sunshine Station was essentially equal to that of the east bank at

Table 18. Estimated chum salmon, pink salmon, coho salmon, and chinook salmon escapement recorded by side-scan sonar in the Susitna River, 1977-1982[1].

Year	Estimated Number of Fish			
	Pink	Chum	Coho	Chinook
1977	1,490,000[3]	104,543[4]	49,694[4]	118,600
1978	2,470,100	148,400	100,800	81,100
1979	124,670	49,076	36,966	77,200
1980	2,047,423	7,939	42,895	[2]
1981	113,349	46,461	33,468	[2]
1982	926,807[5]	458,272[6]	79,824[6]	44,241

[1] Minimum chinook estimates from Sport Fish Division aerial surveys.

[2] Complete surveys precluded by high, turbid water conditions.

[3] Fishwheel catch ratio estimate.

[4] Fishwheel mark-recapture estimate.

[5] Sum of Yentna Station (Susitna Hydroelectric) and Susitna Station east bank sonar estimates.

[6] Sum of Yentna Station (Susitna Hydroelectric) sonar estimate and Sunshine Station (Susitna Hydroelectric) mark-recapture estimate.

Susitna Station; however, there are numerous pink salmon spawning tributaries between the two sites. Based on these factors, it is difficult to determine the accuracy of the reported pink salmon escapement in relation to previously reported escapements for Susitna Station.

Chum Salmon:

A total escapement estimate of 458,272 chum salmon was made for the Susitna River (Table 18), composed of Yentna Station sonar counts and the Sunshine Station mark/recapture estimate (ADF&G 1983). This total does not include Susitna River mainstem or tributary spawners (excepting Yentna River) below Sunshine Station. In contrast, Susitna Station sonar counts for chum salmon totaled 29,245 fish (Appendix Table 63). The estimate of 458,272 chum salmon is the largest ever recorded for the drainage. Escapement estimates from additional selected sites on the Susitna River above Talkeetna are presented in Appendix Table 47.

Spawning-ground surveys enumerated 13,564 chum salmon within the Susitna River drainage (Table 16). As with pink salmon, comprehensive enumeration efforts on spawning grounds are limited to the Susitna River above Talkeetna.

Migratory behavior information was not available for Susitna Station west-bank fish targets attributed to chum salmon. More than 60% of the counts during the period of peak migration on the east bank (19 July through 5 August) occurred in the offshore sonar sectors (Figure 12). Hourly distribution during this period was relatively even throughout the day (Figure 13).

The peak passage date for chum salmon (based on sonar counts) occurred on 1 August and 30 July for Yentna Station and Susitna Station east bank, respectively. Fishwheel data place the midpoint of the run at 2 August for Yentna Station (three-day travel time from Susitna Station, ADF&G 1983) and 31 July on the east bank at Susitna Station.

A total of 313 chum salmon were sampled for age, length, weight, and sex characteristics at Susitna Station. As in past years, four-year-old chum salmon were the dominant age class (83.2%); however, the trend toward a higher proportion of three- and five-year-old fish in even years was less apparent than in even years since 1976 (Table 19). Length and weight characteristics by age class and sex, and the ratio of males to females are presented in Appendix Tables 64 and 65.

Yentna Station chum salmon sonar counts and the mark/recapture estimate at Sunshine Station support previous suspicions (Tarbox et al. 1981; Waltemyer et al. 1980) that Susitna-Station apportioned chum salmon counts are not an accurate reflection of escapement, but a relative index of escapement magnitude (Waltemyer et al. 1980; Tarbox et al. 1981). The reported estimate is also questionable as a total-drainage population estimate because Yentna Station sonar counts are subject to the same problems as Susitna Station, and it is not known what proportion of the population spawns in mainstem sloughs and tributaries below Sunshine Station.

Coho Salmon:

A combination of Yentna Station sonar counts and the Sunshine Station mark/recapture estimate resulted in a coho salmon escapement estimate of 79,824 fish

Table 19. Unweighted age composition of chum salmon collected in the Susitna River, 1975-1982.

Year	Percent Composition by Age Class				Sample Size
	3_1	4_1	5_1	6_1	
1975	9.8	88.3	2.0	0	613
1976	17.2	68.1	14.6	0	267
1977	9.1	86.5	4.3	tr	927
1978	18.7	52.6	28.3	0.4	963
1979	5.1	90.5	4.3	0	391
1980	38.0	49.3	12.7	0	71
1981	1.9	90.9	7.1	0	154
1982	5.3	83.2	11.5	0	340

(excluding mainstem and tributaries other than the Yentna River below Sunshine Station, ADF&G 1983). Sonar counts attributed to coho salmon at Susitna Station numbered 33,137 (Appendix Table 63). The disparity in counts at Susitna Station in comparison to the above Susitna Hydroelectric estimate is due in part to loss of west bank data during critical escapement periods, and suspected migration outside the counting range of the side scan sonars (Tarbox et al. 1981). Spawning ground surveys accounted for an estimated 3,863 coho salmon (Table 16) in selected tributaries and mainstem sloughs of the river. Escapement estimates for other Susitna Hydroelectric Project stations are presented in Appendix Table 47.

Bank, sector, and hourly distribution data are not available for the time period when coho salmon moved past the Susitna Station west bank counter. Sector distribution when most coho salmon were migrating along the east bank indicated passage at the offshore limit of the counting range (Figure 12). Hourly distribution of counts was relatively even throughout the day as the season progressed (Figure 13).

The midpoint of escapement (measured by fishwheel catch) on the west bank was 2 August (Appendix Table 56). East-bank fishwheel catches and sonar counts reached midpoint on 30 July (Appendix Table 57 and Table 5).

Three hundred and five coho salmon were sampled for age, length, weight, and sex characteristics at Susitna Station. The dominant age class (74.4%) and age 4_3 fish (Table 20). Length and weight characteristics by age class and sex, and the ratio of males to females are presented in Appendix Tables 66 and 67.

As with chum salmon, coho salmon escapement estimates from Susitna Hydroelectric Project sites support previous suspicions that escapement estimates obtained at Susitna Station do not reflect total abundance of this species in the river. The reported estimate does not appear comparable to previous Susitna Station coho escapement estimates.

Chinook Salmon:

Chinook salmon escapement estimates have not been undertaken at Susitna Station since 1978. Migratory behavior not conducive to enumeration by side-scan sonar, and early run timing in comparison to other salmon species, are the primary reasons for the lack of an enumeration program. The Petersen mark/recapture program conducted at Sunshine Station resulted in an estimate of 52,347 fish (ADF&G 1983). Stream survey information compiled to date identified 44,241 chinook salmon in selected tributaries in the Susitna River drainage (Table 16). Petersen mark/recapture estimates were also obtained for Talkeetna and Curry stations on the upper Susitna River (Appendix Table 47).

The midpoint of the chinook salmon run at Yentna Station (based on fishwheel catch rates) was approximately 1 July (ADF&G 1983), concurrent with start of operations at Yentna and Susitna Stations. Run timing information for other Susitna Hydroelectric Project stations is presented in ADF&G (1983). Age, length, sex, and weight data for Susitna Hydroelectric project sites are also found in ADF&G (1983).

Index counts from surveys conducted by Sport Fish Division staff on selected tributaries totaled 36,152 spawners (ADF&G 1983). The average for similar index

Table 20. Unweighted age composition of coho salmon collected in the Susitna River, 1975-1982.

Year	Percent Composition by Age Class						Sample Size
	3_2	3_3	4_3	4_4	5_3	5_4	
1975	24.4	0	75.6	0	0	0	406
1976	4.5	0	93.5	0	0.2	1.7	418
1977	8.5	0	90.8	0	0.1	0.6	1,112
1978	28.2	0	71.7	0	0	0.1	773
1979	21.5	3.0	74.1	1.0	0	0.3	297
1980	17.6	2.7	72.9	0	0	6.9	336
1981	13.1	tr	81.4	0	0	5.0	221
1982	22.0	0	74.4	0	0	3.6	305

areas from 1976 to 1979 was approximately 57,000 chinook salmon.

The reported chinook salmon estimate is an index from selected spawning streams within the drainage.

In summary, it appears that the effectiveness of sonar counters at Susitna Station is marginal and greatly dependent on river conditions. The mixed species and resultant differences in migratory behavior lead to serious questions concerning the use of fishwheels to apportion counts. Consequently, the escapement estimates obtained at Susitna Station should generally be viewed as a measure of relative magnitude rather than an absolute population estimate.

Upper Cook Inlet Minor Systems

Escapement estimates for various Upper Cook Inlet rivers not regularly monitored by Commercial Fisheries Division staff are summarized in Table 21.

Chinitna Bay:

A combination of foot and aerial surveys were conducted on Clearwater and Fitz Creeks and Chinitna River in 1982. Peak counts were as follows:

Fitz Creek	100 cho salmon, 1,275 chum salmon, and 200 pink salmon (25 August).
Clearwater Creek	1,000-1,500 coho salmon and 11,000-14,000 chum salmon (24 August).
Chinitna River	1,500 chum salmon (9 August).

Big River:

Cook Inlet Aquaculture Association operated two fishwheels in Big River (seven to eight miles upstream from Cook Inlet) and a weir on Wolverine Creek (outlet of Wolverine Lake). Aerial surveys were conducted in additional known clearwater spawning areas. A total of 32,980 sockeye salmon were enumerated through the weir, and an estimated 10,000 to 20,000 sockeye salmon were counted in known spawning areas. Attempts to obtain an escapement estimate for the drainage based on Petersen mark/recapture techniques have been inconclusive to date. Further information can be obtained from Cook Inlet Aquaculture Association, Soldotna, Alaska (Tom Mears, pers. comm.).

Chakachatna-McArthur Rivers:

Salmon escapement into the Chakachatna-McArthur Rivers was estimated from spawning ground surveys conducted as part of Chakachamna Hydroelectric Project baseline environmental studies. Individual tributary and slough counts are presented in Bechtel Civil and Minerals, Inc., 1983. Salmon escapement counts for the combined drainages were: chinook salmon 3,529; sockeye salmon 78,570; pink salmon 28,040; chum salmon 1,949; and coho salmon 7,328.

Table 21. Salmon escapement counts in selected Upper Cook Inlet anadromous streams, 1982.

Stream Name	Method	Sockeye	Pink	Chum	Coho	Chinook
Fitz Creek[1]	Stream count		200	1,275	100	
Clearwater Creek[1]	Stream count			11,000 - 14,000	1,000 - 1,500	
Chinitna River[1]	Stream count			1,500		
Big River[2]	Stream count	10,000-20,000				
	Weir	32,980				
Chakachatna River-McArthur River[3]	Stream count	78,570	28,040	1,949	7,328	3,529
Chuitna River	Stream count				1,085	3,634-4,028[5]
	Tower[5]		20,410	30		
Straight Creek (Clear Fork Creek)	Stream count					383
Nikolai Creek[4]	Stream count					520
Olson Creek[4]	Stream count					188
Drill Creek[4]						697
Scarp Creek[4]	Stream count					184
Coal Creek	Stream count	12,240				
Theodore River[4]						1,368
Lewis River[4]						606
Fish Creek[6]	Weir-Stream count	28,164			5,201	
Cottonwood Creek[6]	Weir-Stream count	18,358			2,044	
Ship Creek[4]	Stream count					665
Campbell Creek[4]	Stream count					88
Ninilchik River[7]	Stream count					1,430
Deep Creek[7]	Stream count					2,670
Anchor River[7]	Stream count					1,540
Packers Lake[8]	Weir	15,826			339	

-Continued-

Table 21. Salmon escapement counts in selected Upper Cook Inlet anadromous streams, 1982 (continued).

---

[1] Ruesch and Browning, 1982.

[2] Personal communication - Tom Mears, Cook Inlet Aquaculture Association.

[3] Bechtel Civil and Minerals, Inc., 1983.

[4] Delaney and Hepler, 1983.

[5] Environmental Research and Technology, Inc., 1983.

[6] Personal communication - Robert Chlupach, ADF&G, FRED Division.

[7] Hammarstrom, 1982.

[8] Cook Inlet Aquaculture Association, 1982

Chuitna River:

Salmon escapement into the Chuitna River was estimated from lower-river tower counts (pink salmon) and spawning-ground surveys (chinook salmon). Data were collected as baseline information for potential coal field development projects. Specific tributary information can be found in Environmental Research and Technology, Inc. (1983). Reported counts for the drainage were 3,634 - 4,028 chinook salmon, 20,410 pink salmon, 1,085 coho salmon, and 30 chum salmon.

Upper Cook Inlet Westside Streams:

Aerial surveys were conducted by Sport Fish Division staff to enumerate chinook salmon in selected streams (Delaney and Hepler 1983). Streams and corresponding peak chinook salmon counts were as follows:

Chuitna River	3,438
Lewis River	606
Theodore River	1,368
Nikolai Creek	520
Straight Creek (Clear Fork Creek)	383

Beluga River:

Aerial surveys of tributaries enumerated 12,240 sockeye salmon in the west fork of Coal Creek. Chinook salmon surveys enumerated 188 spawners in Olson Creek, 697 spawners in Drill Creek, and 184 spawners in Scarp Creek.

Fish Creek (Big Lake):

Enumeration was accomplished primarily through a weir operated below Big Lake. Additional counts were obtained through foot surveys of the creek from the weir to the Tyonek power line. Final escapement estimates were 28,164 sockeye salmon and 5,201 coho salmon. Further information can be obtained from Robert Chlupach (pers. commn.).

Cottonwood Creek (Cottonwood-Wasilla Lakes):

A combination of weir counts and downstream foot surveys enumerated 18,358 sockeye salmon and 2,044 coho salmon. Further information can be obtained from Robert Chlupach (pers. comm.).

Anchorage Area Streams:

Stream surveys conducted in the Anchorage area by Sport Fish Division staff (Delaney and Hepler 1983) resulted in counts of 68 chinook salmon in Campbell Creek and 665 chinook salmon in Ship Creek.

South Kenai Peninsula Streams:

Aerial surveys were conducted on the Anchor River, Deep Creek, and Ninilchik River by Sport Fish Division staff in 1982. Reported chinook salmon escapements were 1,540, 2,670, and 1,430 fish respectively (Hammarstrom 1982).

Packers Creek (Packers Lake):

A total of 15,826 sockeye salmon and 339 coho salmon were counted through a weir established below the outlet of Packers Lake (CIAA 1982).

ACKNOWLEDGMENTS

This Technical Data Report is identical in substance to Upper Cook Inlet Data Report 83-3 (unpublished), of the same title. The authors received assistance from a number of individuals during the preparation of this document. Jim Browning, Upper Cook Inlet Assistant Area Management Biologist, prepared a significant number of the figures. Fred Jamsen and Henry Yuen of the Anchorage Commercial Fisheries Division staff and David Waltemyer, Upper Cook Inlet Assistant Research Project Leader, provided valuable assistance in computer programming and data input.

Finally, a sincere thanks to the permanent seasonal staff of ADF&G who man the field camps and consistently provide quality data, and Sandi Seagren who formats and types the reports.

LITERATURE CITED

Alaska Department of Fish and Game. 1981. Phase I Final Draft Report. Adult Anadromous Fisheries Project. Alaska Department of Fish and Game. Susitna Hydroelectric Project. 145 pp.

Alaska Department of Fish and Game. 1983. Phase I Final Draft Report. Adult Anadromous Fisheries Project. Alaska Department of Fish and Game. Susitna Hydroelectric Project. (In press).

Barrett, B. Personal communication. Alaska Department of Fish and Game. Susitna Hydroelectric Project. Anchorage, Alaska.

Bechtel Civil and Minerals, Inc. 1983. Chakachamna Hydroelectric Project Interim Feasibility Assessment Report. Volume II.

Bethe, M.L., P.V. Krasnowski, and S.L. Marshall. 1980. Origins of sockeye salmon in the Upper Cook Inlet fishery of 1978 based on scale pattern analysis. Alaska Department of Fish and Game. Informational Leaflet No. 186. 45 pp.

Chlupach, R. Personal communication. Alaska Department of Fish and Game. Fisheries Rehabilitation, Enhancement, and Development Division. Palmer, Alaska.

Cook Inlet Aquaculture Association. 1982. Packers Lake report (mimeo).

Cross, B.A., D.R. Bernard, and S.L. Marshall. 1983. Recruits-per-spawner ratios for sockeye salmon of Upper Cook Inlet, Alaska. (In press).

Delaney, K. and K. Hepler. 1983. Inventory and cataloging of sport fish and sport fish waters of Western Prince William Sound, Lower Susitna River, northern Cook Inlet drainages. (Mimeo).

Elliott, G. Personal communication. United States Department of the Interior. Fish and Wildlife Service, Anchorage, Alaska.

Environmental Research and Technology, Inc. and Ott Water Engineers, Inc. 1983. 1982 Data Report Aquatic Biology, Diamond - Chuitna Project Baseline Studies (draft), for Bechtel Civil and Minerals, Inc.

Flagg, L. 1982. 1982 Central Cook Inlet FRED preliminary report (memorandum).

Hammarstrom S. 1982. Sport Fish Reports to the Board of Fisheries, December 1982.

Litchfield, D. Personal communication. Alaska Department of Fish and Game, Fisheries Rehabilitation, Enhancement, and Development Division, Soldotna, Alaska.

Mears, T. Personal communication. Cook Inlet Aquaculture Association. Soldotna, Alaska.

LITERATURE CITED (Continued)

Nelson, D.C. 1983. Russian River sockeye salmon study. Alaska Department of Fish and Game. Anadromous Fish Studies, Annual Report of Progress, 1982-1983. Project AFS 44, 24 (AFS-44-9). 50 pp.

Roberson, K., M.F. Merritt, and P.J. Fridgen. 1982. Copper River-Prince William Sound sockeye salmon catalog and inventory. Alaska Department of Fish and Game. Completion report for period July 1, 1977 to June 30, 1981. 48 pp.

Ruesch, P. and J. Browning. 1982. Upper Cook Inlet salmon report to the Alaska Board of Fisheries.

Tarbox, K.E., B.E. King, and D. Waltemyer. 1981. Kenai, Kasilof, and Crescent River sonar investigations. Alaska Department of Fish and Game Legislative Report. 37 pp.

Tarbox, K.E., B.E. King, and D.L. Waltemyer. 1982. Cook Inlet sockeye salmon studies. Alaska Department of Fish and Game. Completion report for period July 1, 1977 to June 30, 1982. (In press).

Waltemyer, D.L. T.B. Namtvedt, and B.E. King. 1980. Cook Inlet sockeye salmon studies. Alaska Department of Fish and Game. Technical Report for the period July 1, 1978 to June 30, 1979. 58 pp.

APPENDICES

Appendix Table 1. Total number of fish targets and estimated species composition recorded by side-scan sonar in the Kenai River, 22 June through 4 August 1982[1].

Date	Fish Targets	Estimated Species Composition[2] (Number of Fish)							
		Sockeye	Cumulative	Pink	Cumulative	Coho	Cumulative	Chinook	Cumulative
6/22	1,080	1,080	1,080	0	0	0	0	0	0
6/23	540	540	1,620	0	0	0	0	0	0
6/24	554	554	2,174	0	0	0	0	0	0
6/25	522	522	2,696	0	0	0	0	0	0
6/26	453	453	3,149	0	0	0	0	0	0
6/27	603	603	3,752	0	0	0	0	0	0
6/28	539	539	4,291	0	0	0	0	0	0
6/29	357	357	4,648	0	0	0	0	0	0
6/30	417	417	5,065	0	0	0	0	0	0
7/01	569	569	5,634	0	0	0	0	0	0
7/02	721	721	6,355	0	0	0	0	0	0
7/03	427	427	6,782	0	0	0	0	0	0
7/04	228	228	7,010	0	0	0	0	0	0
7/05	191	191	7,201	0	0	0	0	0	0
7/06	303	303	7,504	0	0	0	0	0	0
7/07	404	404	7,908	0	0	0	0	0	0
7/08	366	366	8,274	0	0	0	0	0	0
7/09	818	818	9,092	0	0	0	0	0	0
7/10	522	522	9,614	0	0	0	0	0	0
7/11	267	267	9,881	0	0	0	0	0	0
7/12	897	897	10,778	0	0	0	0	0	0
7/13	999	968	11,746	12	12	12	12	6	6
7/14	1,009	978	12,724	12	24	12	24	7	13
7/15	3,248	3,150	15,874	39	63	39	63	19	32
7/16	13,485	13,079	28,953	163	226	163	226	81	113
7/17	13,072	12,678	41,631	158	384	158	384	78	191
7/18	71,105	71,105	112,736	0	384	0	384	0	191
7/19	86,993	86,993	199,729	0	384	0	384	0	191
7/20	93,779	93,779	293,508	0	384	0	384	0	191
7/21	55,741	55,741	349,249	0	384	0	384	0	191
7/22	21,426	21,400	370,649	0	384	0	384	26	217
7/23	27,254	27,220	397,869	0	384	0	384	34	251

-Continued-

Appendix Table 1. Total number of fish targets and estimated species composition recorded by side-scan sonar in the Kenai River, 22 June through 4 August 1982[1] (continued).

		Estimated Species Composition[2] (Number of Fish)							
Date	Fish Targets	Sockeye	Cumulative	Pink	Cumulative	Coho	Cumulative	Chinook	Cumulative
7/24	24,209	24,179	422,048	0	384	0	384	30	281
7/25	26,428	25,711	447,759	717	1,101	0	384	0	281
7/26	18,635	18,129	465,888	506	1,607	0	384	0	281
7/27	58,295	56,278	522,166	1,412	3,019	605	989	0	281
7/28	25,946	25,049	547,215	628	3,647	269	1,258	0	281
7/29	12,463	12,293	559,508	0	3,647	170	1,428	0	281
7/30	9,369	9,241	568,749	0	3,647	128	1,556	0	281
7/31	8,624	8,506	577,255	0	3,647	118	1,674	0	281
8/01	5,323	5,250	582,505	0	3,647	73	1,747	0	281
8/02	3,886	3,833	586,338	0	3,647	53	1,800	0	281
8/03	3,435	3,388	589,726	0	3,647	47	1,847	0	281
8/04	2,418	2,385	592,111	0	3,647	33	1,880	0	281
Total	597,920	592,111		3,647		1,880		281	
[3]	27,720	619,831							

[1] Round-off error estimated (worst case) +/- 1 fish per day.

[2] Based on relative abundance in fishwheel catch.

[3] Remainder of run extrapolated on normal run timing.

Appendix Table 2. 1982 north bank of Kenai River side-scan sonar counts by sector.

DATE	SECTOR 1	2	3	4	5	6	7	8	9	10	11	12	TOTAL	CUMULATIVE TOTAL
6 22	2	1	4	1	0	3	8	11	34	51	226	278	619	619
6 23	5	1	0	0	0	1	2	8	21	40	46	79	203	822
6 24	34	4	5	0	0	0	1	1	14	31	41	106	237	1059
6 25	26	1	1	5	3	0	0	2	8	26	37	203	312	1371
6 26	28	7	0	0	0	1	0	2	5	9	20	113	185	1556
6 27	27	5	9	5	9	1	17	31	31	66	47	99	347	1903
6 28	73	7	5	10	1	1	4	10	14	12	40	89	266	2169
6 29	16	8	14	13	3	1	9	13	19	18	21	82	217	2386
6 30	10	1	8	1	0	0	5	5	4	22	26	120	202	2588
7 1	24	0	0	1	0	0	2	5	0	34	25	306	397	2985
7 2	16	2	2	0	0	1	4	17	23	74	34	118	291	3276
7 3	8	0	1	0	0	1	3	5	17	57	45	111	248	3524
7 4	10	3	0	0	0	0	0	0	3	18	20	72	126	3650
7 5	9	0	1	0	0	0	1	1	2	14	27	48	103	3753
7 6	4	3	0	0	0	0	10	10	18	36	48	59	188	3941
7 7	12	0	0	0	0	0	2	4	15	62	151	84	330	4271
7 8	4	1	0	0	0	0	10	14	23	52	100	68	272	4543
7 9	70	11	17	14	10	9	29	46	90	92	113	91	592	5135
7 10	61	3	8	6	3	3	4	11	31	62	68	104	364	5499
7 11	13	1	3	0	0	0	0	2	2	23	30	91	165	5664
7 12	2	1	4	0	0	0	0	13	64	104	135	259	582	6246
7 13	5	3	1	0	5	3	3	4	30	76	172	241	543	6789
7 14	15	0	1	1	10	2	7	15	51	110	235	322	769	7558
7 15	9	50	114	133	111	62	76	88	238	355	339	629	2204	9762
7 16	360	513	770	665	459	200	153	415	587	903	1135	1907	8067	17829
7 17	234	561	1144	531	355	121	103	162	373	1052	548	1033	6217	24046
7 18	1161	11202	8804	2860	1928	477	315	495	659	1652	618	871	31042	55088
7 19	165	9234	14219	3103	1384	377	328	559	974	2350	963	2793	36449	91537
7 20	62	8217	15384	4343	1640	474	459	634	769	1721	1366	1493	36562	128099
7 21	72	2626	7070	4216	2369	572	520	487	386	711	466	905	20400	148499
7 22	72	375	2033	1979	1357	305	305	246	248	357	377	660	8314	156813
7 23	54	383	1975	1855	1226	336	294	312	292	313	522	1298	8860	165673
7 24	226	3710	2035	756	326	92	62	107	120	286	229	374	8323	173996
7 25	131	3937	768	354	94	28	37	83	165	444	493	602	7136	181132
7 26	236	4316	1175	422	110	32	33	68	154	264	207	215	7232	188364
7 27	749	14987	4364	663	61	8	21	36	48	107	116	180	21340	209704
7 28	233	4741	1602	356	44	12	6	18	80	197	198	238	7725	217429
7 29	80	1988	610	147	50	0	8	18	53	184	170	220	3528	220957
7 30	179	2048	699	158	73	29	10	13	37	135	164	255	3800	224757
7 31	94	1100	389	101	15	1	5	12	34	98	129	135	2113	226870
8 1	80	925	367	79	20	5	4	8	47	152	201	217	2105	228975
8 2	55	279	321	81	21	5	6	14	48	166	208	263	1467	230442
8 3	42	159	133	50	14	3	3	16	37	95	157	225	934	231376
8 4	9	84	116	39	12	5	1	4	31	65	77	140	583	231959
8 5	0	0	0	0	0	0	0	0	0	0	0	0	0	231959
	4777	71498	64176	22948	11713	3171	2870	4025	5899	12696	10390	17796	231959	

Appendix Table 3. 1982 south bank of Kenai River side-scan sonar counts by sector.

1982 SOUDEL

DATE	SECTOR 1	2	3	4	5	6	7	8	9	10	11	12	TOTAL	CUMULATIVE TOTAL
6 22	2	0	5	4	0	0	12	15	18	136	124	142	458	458
6 23	0	1	2	4	0	0	4	19	12	91	88	107	328	786
6 24	4	0	1	0	0	0	9	17	17	91	51	123	313	1099
6 25	11	4	3	3	1	0	7	21	19	91	32	59	251	1350
6 26	3	7	0	1	0	0	7	20	36	86	50	55	265	1615
6 27	67	3	7	0	0	0	4	8	13	50	39	69	260	1875
6 28	21	27	44	7	2	1	8	20	25	63	39	26	283	2158
6 29	13	13	22	2	1	0	2	3	5	16	31	23	131	2289
6 30	2	0	3	0	0	0	4	7	17	48	80	40	201	2490
7 1	1	0	0	0	0	0	3	4	9	67	52	34	170	2660
7 2	7	2	3	0	0	0	6	40	64	93	111	92	418	3078
7 3	9	7	1	2	0	0	3	5	15	43	63	21	169	3247
7 4	2	0	2	0	0	0	0	0	10	15	35	43	107	3354
7 5	0	0	0	1	0	0	0	1	7	12	24	53	98	3452
7 6	2	1	0	0	0	0	1	2	3	4	25	48	86	3538
7 7	2	0	0	1	0	0	1	0	7	9	15	24	59	3597
7 8	2	5	3	0	0	0	0	2	11	17	35	30	105	3702
7 9	5	5	1	0	0	0	2	7	43	44	48	48	203	3905
7 10	12	18	7	2	0	0	5	11	14	39	34	29	171	4076
7 11	6	5	2	0	0	0	3	1	4	24	29	31	105	4181
7 12	6	9	4	0	0	0	8	9	37	72	76	91	312	4493
7 13	5	22	27	0	0	1	3	12	36	104	101	141	452	4945
7 14	2	27	10	1	0	1	0	9	21	51	61	65	248	5193
7 15	26	281	321	16	0	0	5	16	33	84	96	185	1063	6256
7 16	149	1343	1575	86	6	0	10	44	339	694	552	587	5385	11641
7 17	110	2839	2964	125	3	0	20	12	67	279	189	260	6868	18509
7 18	1058	29561	9134	70	0	1	5	15	41	147	124	90	40246	58755
7 19	1077	27790	19862	358	12	1	7	43	108	404	342	540	50544	109299
7 20	2283	36850	15952	238	5	0	10	31	177	586	485	595	57212	166511
7 21	1929	22848	9119	140	10	1	7	46	107	445	362	328	35342	201853
7 22	653	8449	3731	42	1	0	8	10	24	48	86	79	13131	214984
7 23	834	12567	4579	88	1	0	2	10	9	28	69	98	18285	233269
7 24	2178	10138	2751	183	107	108	35	49	54	90	251	239	16183	249452
7 25	917	8657	8401	1179	40	1	5	7	12	11	17	46	19293	268745
7 26	742	4963	4695	828	46	1	7	7	7	12	24	81	11413	280158
7 27	8247	22854	5130	471	19	0	9	4	9	20	17	95	36875	317033
7 28	2100	12438	3425	147	3	0	3	5	11	24	30	35	18221	335254
7 29	1418	5124	1974	157	63	61	9	10	12	29	42	44	8943	344197
7 30	1012	3257	816	120	77	76	6	11	12	46	96	53	5582	349779
7 31	1332	1941	889	601	575	574	58	62	66	91	168	136	6493	356272
8 1	1071	1601	332	28	3	1	0	4	11	35	77	55	3218	359490
8 2	732	1114	208	20	1	0	2	16	20	68	142	95	2418	361908
8 3	713	1163	207	18	1	0	9	14	32	81	161	103	2502	364410
8 4	498	650	154	18	2	1	9	24	39	78	234	128	1835	366245
	29263	216584	96366	4961	979	829	318	673	1633	4566	4807	5266	366245	

Appendix Table 2. Spawning stream tag recovery efforts, southern Southeastern Alaska, 1981 (continued).

Stream	Number of Surveys	Survey Dates	Peak Escapement Observed	Number of Tags Recovered	Number of Tags Observed
105-10-24	4	30 July	7,550	0	0
		12 August	17,383	0	0
		13 August	8,383	0	1
		16 September	5,460	7	1
105-10-32	2	13 August	7,500	0	0
		16 September	15,720	2	0
105-10-28	1	16 September	1,469	0	0
105-20-02	1	17 September	1,210	27	0
105-20-04	2	11 August	113	0	0
		17 September	277	6	0
105-20-06	1	11 August	50	0	1
105-20-07	1	11 August	54	0	0
105-20-08	2	11 August	426	0	1
		4 September	1,195	17	2
105-20-10	2	11 August	232	1	0
		4 September	2,144	13	0
105-20-12	2	11 August	154	0	0
		4 September	1,247	9	0
105-41-05	2	11 August	3,778	0	0
		1 September	4,055	5	1
105-42-05	2	12 August	18,753	2	2
		2 September	65,654	12	3
105-42-08	1	1 September	238	0	0
105-42-09	2	12 August	7,675	1	0
		2 September	23,545	5	0
105-42-10	2	12 August	4,190	0	0
		2 September	7,100	1	0
105-42-11	1	12 August	555	0	0
105-42-12	1	1 September	10,166	0	0
105-42-14	1	1 September	711	2	0
105-43-01	1	3 September	8	0	0
105-43-02	2	12 August	303	2	0
		3 September	7,046	42	8
105-43-05	1	12 August	3	0	0
105-43-06	2	12 August	6,328	19	0
		3 September	18,022	91	10
105-50-01	2	12 August	3,563	4	8
		3 September	19,080	21	5
106-10-04	2	3 September	3	0	0
		21 September	1,250	0	0
106-10-06	2	3 September	None	0	0
		21 September	1,900	1	0

-Continued-

Appendix Table 5. 1982 south bank of Kenai River side-scan sonar counts by sector, three-day time periods.

DATE	SECTOR 1	2	3	4	5	6	7	8	9	10	11	12	TOTAL	CUMULATIVE TOTAL
6 22-24	6	1	8	8	0	0	25	51	47	318	263	372	1099	1099
6 25-27	81	14	10	4	1	0	18	49	68	227	121	183	776	1875
6 28-30	36	40	69	9	3	1	14	30	47	127	150	89	615	2490
7 1- 3	17	9	4	2	0	0	12	49	88	203	226	147	757	3247
7 4- 6	4	1	2	1	0	0	1	3	20	31	84	144	291	3538
7 7- 9	9	10	4	1	0	0	3	9	61	70	98	102	367	3905
7 10-12	24	32	13	2	0	0	16	21	55	135	139	151	588	4493
7 13-15	33	330	358	17	0	2	8	37	90	239	258	391	1763	6256
7 16-18	1317	33743	13673	281	9	1	35	71	447	1120	865	937	52499	58755
7 19-21	5289	87488	44933	736	27	2	24	120	392	1435	1189	1463	143098	201853
7 22-24	3665	31154	11061	313	109	108	45	69	87	166	406	416	47599	249452
7 25-27	9906	36474	18226	2478	105	2	21	18	28	43	58	222	67581	317033
7 28-30	4530	20819	6215	424	143	137	18	26	35	99	168	132	32746	349779
7 31- 2	3135	4656	1429	649	579	575	60	82	97	194	387	286	12129	361908
8 3- 4	1211	1813	361	36	3	1	18	38	71	159	395	231	4337	366245
	29263	216584	96366	4961	979	829	318	673	1633	4566	4807	5266	366245	

Appendix Table 6. 1982 north bank of Kenai River side-scan sonar counts by hour.

	HOUR																								
DATE	1	2	3	4	5	6	7	8	9	10	11	12	13	14	15	16	17	18	19	20	21	22	23	24	TO
6 22	62	38	40	33	32	71	40	27	51	54	27	27	6	9	10	6	15	4	8	7	10	11	7	24	
6 23	7	16	17	1	1	1	2	1	4	1	2	3	2	1	2	4	2	2	6	9	6	8	46	59	
6 24	27	27	19	12	6	9	8	6	3	0	1	1	-3 >	6	13	8	8	6	11	3	8	8	31	13	
6 25	25	23	9	4	14	12	7	5	14	20	15	7	10	6	5	20	14	5	6	26	16	13	8	28	
6 26	10	13	6	6	3	7	8	4	13	13	10	5	5	3	8	4	1	0	11	12	6	7	12	18	
6 27	10	16	5	5	14	20	1	0	8	4	5	7	31	16	16	18	21	18	23	28	33	13	13	22	
6 28	12	6	10	12	21	11	13	16	16	15	10	15	12	11	6	3	8	12	10	10	14	5	8	10	
6 29	21	14	0	4	11	14	12	7	7	0	7	10	17	9	6	3	6	9	10	5	14	2	12	17	
6 30	8	13	6	3	5	2	11	9	4	14	9	5	6	2	11	5	10	14	7	10	22	6	18	2	
7 1	33	31	31	29	23	24	18	7	5	14	19	8	20	10	12	13	22	7	15	21	11	5	3	16	
7 2	0	5	2	5	2	14	2	13	20	4	14	12	7	10	19	9	11	6	18	13	15	33	30	27	
7 3	27	18	21	6	1	6	1	7	20	20	10	9	8	15	7	15	7	2	6	5	7	11	7	12	
7 4	7	10	7	1	2	1	3	11	8	2	1	7	5	4	4	10	0	2	4	10	9	13	2	3	
7 5	6	6	3	4	4	3	3	1	1	3	4	7	5	6	9	4	2	5	2	4	2	7	10	2	
7 6	25	6	6	6	6	6	6	6	6	6	10	5	3	6	6	0	11	5	12	9	15	8	8	11	
7 7	3	8	15	12	11	12	19	15	10	11	7	10	12	8	12	12	22	11	33	20	25	9	26	7	
7 8	8	21	5	8	12	14	22	18	13	14	19	5	5	3	6	2	12	21	4	12	12	12	12	12	
7 9	24	24	24	24	24	24	24	24	24	18	30	9	16	15	21	21	20	22	26	36	49	32	31	30	
7 10	38	13	36	22	28	12	13	15	12	21	18	9	20	15	23	5	7	18	11	12	8	4	4	0	
7 11	3	4	0	1	4	0	0	2	5	3	0	2	1	6	7	2	10	7	17	15	15	25	21	15	
7 12	8	8	12	17	19	7	8	3	9	12	3	4	6	4	15	57	34	71	63	99	49	32	28	14	
7 13	31	17	11	7	22	22	39	22	24	11	5	27	14	44	28	13	34	40	28	17	11	33	14	29	
7 14	14	17	12	30	41	32	41	26	29	33	2	17	13	32	29	23	35	24	37	46	60	71	44	61	
7 15	36	13	11	20	31	43	60	29	31	42	39	59	39	41	72	66	83	96	152	180	207	263	357	234	
7 16	80	50	8	32	151	336	402	283	183	296	343	356	347	843	659	678	449	386	372	402	354	191	525	341	
7 17	291	191	133	115	201	172	179	153	97	154	153	180	82	59	91	102	106	264	228	351	485	1005	959	466	
7 18	1751	1241	1718	446	759	810	1339	631	515	889	1312	356	336	194	628	1390	1249	2832	3900	2490	2382	985	1203	1686	
7 19	1550	1760	1349	587	2948	4778	3512	621	322	388	431	423	879	1146	259	360	628	1494	1525	1381	1720	1946	3262	3150	
7 20	1839	1532	2541	1293	1585	1917	1575	1023	523	232	205	171	300	604	709	785	989	1781	2361	3588	3468	3488	2806	1247	
7 21	1835	875	932	809	972	1506	1071	1198	627	382	253	346	416	361	750	1182	545	1095	1054	937	968	859	906	521	
7 22	191	66	60	48	123	147	52	127	107	158	129	146	657	889	966	632	699	839	831	630	229	180	281	127	
7 23	55	54	41	43	178	203	334	283	213	201	99	259	670	820	1134	1133	628	393	327	403	348	543	404	94	
7 24	65	134	25	85	214	309	458	550	664	414	277	144	348	156	140	161	106	367	564	498	586	845	602	611	
7 25	423	382	209	137	69	87	94	115	141	114	103	142	98	105	121	113	136	125	219	203	317	736	1234	1713	
7 26	1815	1281	735	445	121	133	296	265	115	25	50	75	62	33	35	47	60	56	127	417	255	235	281	268	
7 27	912	821	455	124	13	25	40	58	157	240	349	152	220	333	284	639	2196	3277	2347	3766	2670	1337	645	280	
7 28	1599	1360	775	342	167	114	84	125	105	62	34	34	97	95	192	159	138	147	230	171	152	147	436	960	
7 29	672	426	235	90	16	10	13	9	14	17	18	28	42	31	42	32	128	65	110	62	75	176	278	939	
7 30	839	817	564	173	29	28	34	82	76	51	28	156	48	14	22	25	24	30	38	32	46	96	153	395	
7 31	476	357	174	131	18	25	29	23	34	22	17	14	12	13	12	14	8	5	12	33	40	58	149	437	
8 1	507	282	216	37	22	24	27	21	19	0	1	7	36	21	24	25	29	27	39	39	81	120	92	409	
8 2	335	214	90	37	43	41	37	39	2	4	13	12	15	19	30	24	21	21	59	89	98	64	47	113	
8 3	122	83	134	37	34	46	36	15	9	0	0	0	16	23	15	15	22	22	43	36	41	28	55	102	
8 4	85	91	55	20	24	22	20	15	18	0	0	0	0	4	11	6	26	15	20	42	41	35	15	18	
8 5	0	0	0	0	0	0	0	0	0	0	0	0	0	0	0	0	0	0	0	0	0	0	0	0	
	15917	12384	10757	5303	8024	11100	9993	5910	4278	3984	4082	3271	4947	6045	6471	7845	8582	13648	14926	16179	14980	13705	15085	14543	

Appendix Table 7. 1982 south bank of Kenai River side-scan sonar counts by hour.

DATE	HOUR 1	2	3	4	5	6	7	8	9	10	11	12	13	14	15	16	17	18	19	20	21	22	23	24	TOTAL
6 22	9	4	15	10	13	10	17	11	13	19	20	11	34	38	33	12	11	12	32	34	55	14	16	15	458
6 23	21	3	4	3	7	10	8	12	20	3	4	7	8	7	15	25	48	20	29	13	21	10	16	14	328
6 24	12	11	9	9	6	4	2	4	2	3	5	23	2	21	9	20	15	27	28	29	17	16	28	11	313
6 25	11	7	1	2	14	12	10	8	2	6	4	4	10	12	1	4	14	19	21	17	26	21	17	8	251
6 26	13	4	6	6	0	8	5	22	15	12	8	15	4	27	17	2	15	0	1	17	29	15	17	7	245
6 27	6	5	12	7	12	3	4	6	5	8	12	28	12	15	10	9	16	5	20	21	20	12	8	4	260
6 28	4	13	4	0	5	3	13	13	3	3	14	2	5	1	11	20	25	37	12	17	24	17	12	25	283
6 29	12	14	3	5	4	2	7	4	3	5	3	2	3	4	4	7	6	2	7	11	12	0	5	6	131
6 30	0	2	0	0	0	5	2	10	3	0	3	13	6	4	14	4	6	11	30	25	17	9	30	7	201
7 1	2	1	0	2	3	12	0	2	0	14	4	10	19	4	10	10	10	17	9	14	1	12	11	3	170
7 2	0	5	2	5	2	14	2	4	1	4	18	2	25	34	19	37	33	27	26	72	51	24	4	7	418
7 3	2	6	11	0	5	6	2	4	0	3	12	5	14	12	15	25	7	4	5	4	12	2	7	6	169
7 4	4	5	3	1	3	5	1	1	8	1	0	0	1	1	9	14	1	4	10	10	5	14	3	3	107
7 5	6	1	1	12	11	14	0	0	0	0	0	0	2	8	1	4	16	3	2	6	4	3	2	2	98
7 6	0	8	1	1	4	2	2	4	1	1	4	0	2	2	6	0	1	2	3	12	6	10	0	14	86
7 7	2	3	0	0	1	4	0	0	0	0	1	0	0	3	13	7	7	0	2	0	13	0	0	3	59
7 8	3	0	0	1	3	1	3	2	4	0	9	1	4	7	2	2	9	6	12	6	7	14	9	0	105
7 9	3	5	4	0	0	0	1	0	0	2	6	2	3	49	10	6	17	13	21	31	11	9	4	6	203
7 10	5	11	5	0	4	6	10	3	2	3	14	6	6	9	11	11	9	13	8	0	8	13	7	7	171
7 11	7	2	2	0	2	0	3	1	6	5	0	1	1	2	6	13	5	2	3	6	10	8	12	8	105
7 12	10	6	2	0	2	9	8	5	5	11	2	17	15	10	12	32	20	12	24	28	30	19	18	15	312
7 13	20	29	11	1	6	20	21	3	11	13	25	37	25	11	23	30	29	29	26	17	18	26	10	11	452
7 14	18	7	6	0	18	6	3	2	8	6	10	2	8	13	9	9	5	5	11	17	21	12	11	41	248
7 15	23	33	17	6	6	3	10	8	3	13	26	16	22	37	20	5	19	16	26	80	159	96	50	369	1063
7 16	270	99	30	12	89	51	68	80	121	196	174	154	179	553	331	675	586	268	149	333	243	280	184	260	5385
7 17	348	165	103	25	28	52	27	39	73	27	149	246	196	158	196	234	175	203	473	443	637	1204	1136	531	6868
7 18	791	376	360	120	122	220	311	145	514	727	855	2302	1894	2619	2343	3017	3197	2576	2338	4141	2293	2397	2930	3638	40246
7 19	2241	2009	718	625	1818	2965	2531	2357	1668	1368	615	1384	2552	3293	3827	978	1315	3152	1954	3976	3454	2676	1165	1903	50544
7 20	2323	2001	989	1138	2784	2993	2170	1687	997	938	1098	1240	1732	2416	3055	3024	2702	5004	4213	3632	3455	3015	1974	2632	57212
7 21	2295	1519	1223	1051	878	2626	2733	2365	1222	1499	1621	1562	517	565	1278	1272	2146	2383	1115	2001	1621	825	549	476	35342
7 22	472	152	85	110	555	470	350	663	253	184	47	58	45	461	319	776	938	857	813	1312	1511	1424	623	653	13131
7 23	256	86	95	69	140	192	256	337	365	319	455	1008	1517	1284	1709	1302	1842	1502	1006	515	1506	1260	761	503	18285
7 24	177	164	81	127	211	289	431	531	351	177	299	817	822	547	648	518	661	1344	1109	810	1603	1166	1512	1788	16183
7 25	949	489	196	115	163	199	275	282	350	117	483	1619	667	1405	718	1140	364	1308	866	1280	1423	1584	1391	1910	19293
7 26	802	371	258	440	327	308	234	382	440	188	125	104	120	507	249	46	164	250	545	1160	1119	1011	1212	1051	11413
7 27	615	596	450	196	136	173	142	216	520	800	1141	2192	2321	1379	2316	2600	2121	2830	2926	2991	2400	2051	3011	2752	36875
7 28	1426	472	111	150	265	256	259	395	159	253	347	642	851	1107	1007	1212	985	1400	930	1262	958	854	1329	1591	18221
7 29	962	622	442	171	230	209	146	148	78	64	72	123	140	237	238	435	406	372	607	440	652	719	721	709	8943
7 30	501	440	249	209	96	81	21	76	109	81	240	103	158	126	117	151	87	186	270	487	476	546	532	240	5582
7 31	270	270	270	270	270	270	270	270	270	270	270	270	270	52	88	63	53	141	270	205	328	248	737	798	6493
8 1	595	483	413	200	42	33	50	49	24	16	14	22	16	29	22	21	29	28	26	57	72	119	287	571	3218
8 2	545	345	194	254	60	37	9	32	15	26	41	34	29	29	12	30	41	32	21	44	50	37	127	374	2418
8 3	589	547	225	120	46	48	28	33	12	16	19	10	40	34	40	36	30	34	42	38	31	22	123	339	2502
8 4	351	295	234	109	16	24	13	27	3	4	16	39	38	40	39	38	55	57	51	45	50	53	92	146	1835
	16971	11686	6865	5582	8407	11655	10458	10243	7659	7405	8285	14133	14335	17172	18832	17876	18241	24213	20092	25659	24459	21867	20693	23457	366245

Appendix Table 8. 1982 north bank of Kenai River side-scan sonar counts by hour, three-day time periods.

DATE	HOUR 1-2	3-4	5-6	7-8	9-10	11-12	13-14	15-16	17-18	19-20	21-22	23-24	TOTAL	CUMULATIVE TOTAL
6 22-24	177	122	120	84	113	61	27	43	37	44	51	180	1059	1059
6 25-27	97	35	70	25	72	49	71	71	59	106	88	101	844	1903
6 28-30	74	35	64	68	56	56	57	34	59	52	63	67	685	2588
7 1- 3	114	94	70	48	83	72	70	75	55	78	82	95	936	3524
7 4- 6	60	27	22	30	26	34	29	33	25	41	54	36	417	3941
7 7- 9	88	88	97	122	90	80	59	74	108	131	139	118	1194	5135
7 10-12	74	88	70	41	62	36	52	109	147	217	133	82	1111	6246
7 13-15	128	91	191	217	170	149	183	231	312	460	645	739	3516	9762
7 16-18	3604	2452	2429	2987	2134	2700	1861	3548	5286	7743	5402	5180	45326	55088
7 19-21	9421	7511	13706	9000	2474	1829	3706	4045	6532	10846	12449	11892	93411	148499
7 22-24	565	302	1174	1804	1757	1054	3540	4166	3032	3253	2731	2119	25497	173996
7 25-27	5634	2105	448	868	792	871	851	1239	5850	7079	5550	4421	35708	209704
7 28-30	5713	2179	364	347	325	298	327	472	532	643	692	3161	15053	224757
7 31- 2	2171	685	173	176	81	64	116	129	111	271	461	1247	5685	230442
8 3- 5	381	246	126	86	27	0	43	47	85	141	145	190	1517	231959
	28301	16060	19124	15903	8262	7353	10992	14316	22230	31105	28685	29628	231959	

Appendix Table 9. 1982 south bank of Kenai River side-scan sonar counts by hour, three-day time periods.

DATE	HOUR 1-2	3-4	5-6	7-8	9-10	11-12	13-14	15-16	17-18	19-20	21-22	23-24	TOTAL	CUMULATIVE TOTAL
6 22-24	60	50	50	54	60	70	110	114	133	165	133	100	1099	1099
6 25-27	46	34	49	55	48	71	80	43	69	97	123	61	776	1875
6 28-30	45	12	19	49	17	37	23	60	87	102	79	85	615	2490
7 1- 3	16	20	42	14	22	51	108	116	98	130	102	38	757	3247
7 4- 6	24	19	39	8	11	4	16	34	27	43	42	24	291	3538
7 7- 9	16	5	9	6	6	19	66	40	52	72	54	22	367	3905
7 10-12	41	9	23	30	32	40	43	85	61	69	88	67	588	4493
7 13-15	130	41	59	47	54	116	116	96	103	177	332	492	1763	6256
7 16-18	2049	670	562	670	1658	3880	5599	6796	7005	7877	7054	8679	52499	58755
7 19-21	12388	5744	14064	13843	7692	7520	11075	13434	16702	16891	15046	8699	143098	201853
7 22-24	1307	567	1857	2568	1649	2684	4676	5272	7144	5565	8470	5840	47599	249452
7 25-27	3822	1655	1306	1531	2415	5664	6399	7069	7037	9768	9588	11327	67581	317033
7 28-30	4423	1332	1137	1045	744	1527	2619	3160	3436	3996	4205	5122	32746	349779
7 31- 2	2508	1601	712	680	621	651	425	236	324	623	854	2894	12129	361908
8 3- 4	1782	688	134	101	35	84	152	153	176	176	156	700	4337	366245
	---	---	---	---	---	---	---	---	---	---	---	---	---	
	28657	12447	20062	20701	15064	22418	31507	36708	42454	45751	46326	44150	366245	

Appendix Table 10. Total number of fish targets and estimated species composition recorded by north bank sonar in the Kenai River, 22 June through 3 August 1982[1].

Date	Fish Targets	Estimated Species Composition[2] (Number of Fish)							
		Sockeye	Cumulative	Pink	Cumulative	Coho	Cumulative	Chinook	Cumulative
6/22	621	621	621	0	0	0	0	0	0
6/23	211	211	832	0	0	0	0	0	0
6/24	240	240	1,072	0	0	0	0	0	0
6/25	277	277	1,349	0	0	0	0	0	0
6/26	189	189	1,538	0	0	0	0	0	0
6/27	256	256	1,794	0	0	0	0	0	0
6/28	255	255	2,049	0	0	0	0	0	0
6/29	226	226	2,275	0	0	0	0	0	0
6/30	207	207	2,482	0	0	0	0	0	0
7/01	397	397	2,879	0	0	0	0	0	0
7/02	291	291	3,170	0	0	0	0	0	0
7/03	251	251	3,421	0	0	0	0	0	0
7/04	122	122	3,543	0	0	0	0	0	0
7/05	97	97	3,640	0	0	0	0	0	0
7/06	222	222	3,862	0	0	0	0	0	0
7/07	338	338	4,200	0	0	0	0	0	0
7/08	263	263	4,463	0	0	0	0	0	0
7/09	610	610	5,073	0	0	0	0	0	0
7/10	351	351	5,424	0	0	0	0	0	0
7/11	162	162	5,586	0	0	0	0	0	0
7/12	583	583	6,169	0	0	0	0	0	0
7/13	550	533	6,702	7	7	7	7	3	3
7/14	759	736	7,438	9	16	9	16	5	8
7/15	2,184	2,118	9,556	26	42	26	42	13	21
7/16	8,096	7,852	17,408	98	140	98	140	49	70
7/17	6,206	6,019	23,427	75	215	75	215	37	107
7/18	30,859	30,859	54,286	0	215	0	215	0	107
7/19	36,449	36,449	90,735	0	215	0	215	0	107
7/20	36,567	36,567	127,302	0	215	0	215	0	107
7/21	20,401	20,401	147,703	0	215	0	215	0	107
7/22	8,295	8,285	155,988	0	215	0	215	10	117
7/23	8,972	8,961	164,949	0	215	0	215	11	128

-Continued-

Appendix Table 10. Total number of fish targets and estimated species composition recorded by north bank sonar in the Kenai River, 22 June through 3 August 1982[1] (continued).

Date	Fish Targets	Estimated Species Composition[2] (Number of Fish)							
		Sockeye	Cumulative	Pink	Cumulative	Coho	Cumulative	Chinook	Cumulative
7/24	8,321	8,311	173,260	0	215	0	215	10	138
7/25	7,136	6,942	180,202	194	409	0	215	0	138
7/26	7,222	7,026	187,228	196	605	0	215	0	138
7/27	21,420	20,679	207,907	519	1,124	222	437	0	138
7/28	7,725	7,458	215,365	187	1,311	80	517	0	138
7/29	3,528	3,480	218,845	0	1,311	48	565	0	138
7/30	3,803	3,751	222,596	0	1,311	52	617	0	138
7/31	2,113	2,084	224,680	0	1,311	29	646	0	138
8/01	3,218	3,174	227,854	0	1,311	44	690	0	138
8/02	1,467	1,447	229,301	0	1,311	20	710	0	138
8/03	933	920	230,221	0	1,311	13	723	0	138
8/04	583	575	230,796	0	1,311	8	731	0	138
Total	232,976	230,796		1,311		731		138	

[1] Round-off error estimated (worst case) +/- 1 fish per day.

[2] Based on relative abundance in fishwheel catch.

Appendix Table 11. Total number of fish targets and estimated species composition recorded by south bank sonar in the Kenai River, 22 June through 3 August 1982[1].

Date	Fish Targets	Estimated Species Composition[2] (Number of Fish)							
		Sockeye	Cumulative	Pink	Cumulative	Coho	Cumulative	Chinook	Cumulative
6/22	459	459	459	0	0	0	0	0	0
6/23	329	329	788	0	0	0	0	0	0
6/24	314	314	1,102	0	0	0	0	0	0
6/25	245	245	1,347	0	0	0	0	0	0
6/26	264	264	1,611	0	0	0	0	0	0
6/27	347	347	1,958	0	0	0	0	0	0
6/28	284	284	2,242	0	0	0	0	0	0
6/29	131	131	2,373	0	0	0	0	0	0
6/30	210	210	2,583	0	0	0	0	0	0
7/01	172	172	2,755	0	0	0	0	0	0
7/02	430	430	3,185	0	0	0	0	0	0
7/03	176	176	3,361	0	0	0	0	0	0
7/04	106	106	3,467	0	0	0	0	0	0
7/05	94	94	3,561	0	0	0	0	0	0
7/06	81	81	3,642	0	0	0	0	0	0
7/07	66	66	3,708	0	0	0	0	0	0
7/08	103	103	3,811	0	0	0	0	0	0
7/09	208	208	4,019	0	0	0	0	0	0
7/10	171	171	4,190	0	0	0	0	0	0
7/11	105	105	4,295	0	0	0	0	0	0
7/12	314	314	4,609	0	0	0	0	0	0
7/13	449	435	5,044	5	5	5	5	3	3
7/14	250	242	5,286	3	8	3	8	2	5
7/15	1,064	1,032	6,318	13	21	13	21	6	11
7/16	5,389	5,227	11,545	65	86	65	86	32	43
7/17	6,866	6,659	18,204	83	169	83	169	41	84
7/18	40,246	40,246	58,450	0	169	0	169	0	84
7/19	50,544	50,544	108,994	0	169	0	169	0	84
7/20	57,212	57,212	166,206	0	169	0	169	0	84
7/21	35,340	35,340	201,546	0	169	0	169	0	84
7/22	13,131	13,115	214,661	0	169	0	169	16	100
7/23	18,282	18,259	232,920	0	169	0	169	23	123

-Continued-

Appendix Table 11. Total number of fish targets and estimated species composition recorded by south bank sonar in the Kenai River, 22 June through 3 August 1982[1] (continued).

Date	Fish Targets	Estimated Species Composition[2] (Number of Fish							
		Sockeye	Cumulative	Pink	Cumulative	Coho	Cumulative	Chinook	Cumulative
7/24	15,888	15,868	248,788	0	169	0	169	20	143
7/25	19,292	18,769	267,557	523	692	0	169	0	143
7/26	11,413	11,103	278,660	310	1,002	0	169	0	143
7/27	36,875	35,599	314,259	893	1,895	383	552	0	143
7/28	18,221	17,591	331,850	441	2,336	189	741	0	143
7/29	8,935	8,813	340,663	0	2,336	122	863	0	143
7/30	5,566	5,490	346,153	0	2,336	76	939	0	143
7/31	6,511	6,422	352,575	0	2,336	89	1,028	0	143
8/01	2,105	2,076	354,651	0	2,336	29	1,057	0	143
8/02	2,419	2,386	357,037	0	2,336	33	1,090	0	143
8/03	2,502	2,468	359,505	0	2,336	34	1,124	0	143
8/04	1,835	1,810	361,315	0	2,336	25	1,149	0	143
Total	364,944	361,315		2,336		1,149		143	

[1] Round-off error estimated (worst case) +/- 1 fish per day.

[2] Based on relative abundance in fishwheel catch.

Appendix Table 12. Daily fishwheel catch by species on the north bank of the Kenai River, 22 June through 4 August 1982[1] [2].

Date	Sockeye	Pink	Coho	Chinook
6/22/82	0	0	0	0
6/23/82	0	0	0	0
6/24/82	0	0	0	0
6/25/82	0	0	0	0
6/26/82	0	0	0	0
6/27/82	0	0	0	0
6/28/82	0	0	0	0
6/29/82	0	0	0	0
6/30/82	0	0	0	0
7/01/82	0	0	0	0
7/02/82	0	0	0	0
7/03/82	0	0	0	0
7/04/82	0	0	0	0
7/05/82	0	0	0	0
7/06/82	0	0	0	0
7/07/82	0	0	0	0
7/08/82	0	0	0	0
7/09/82	0	0	0	0
7/10/82	0	0	0	0
7/11/82	0	0	0	0
7/12/82	0	0	0	0
7/13/82	4	0	0	0
7/14/82	6	2	0	0
7/15/82	16	0	0	0
7/16/82	70	0	2	0
7/17/82	65	0	0	1
7/18/82	149	0	0	0
7/19/82	203	0	0	0
7/20/82	596	0	0	0
7/21/82	583	0	0	0
7/22/82	238	0	0	1
7/23/82	282	0	0	0
7/24/82	282	0	0	0
7/25/82	111	3	0	0
7/26/82	140	4	0	0
7/27/82	122	0	0	0
7/28/82	436	14	6	0
7/29/82	42	0	0	0
7/30/82	3	0	0	0
7/31/82	5	0	0	0
8/01/82	0	0	0	0
8/02/82	0	0	0	0
8/03/82	13	0	1	0
8/04/82	9	0	0	0
Total	3,375	23	9	2

[1] Fishwheel catch adjusted for 24 hours: $\frac{\text{daily catch x 24 hours}}{\text{hours open}}$

[2] Two fishwheels operated on the north bank from 17 July through 31 July. Catches presented for this time period are combined totals.

Appendix Table 13. Age composition of sockeye salmon collected by test fishing in the Kenai River, 1982.

Year	Percent Composition by Age Class								Sample Size
	3_2	4_2	5_2	6_2	4_3	5_3	6_3	Other	
1982		4.4	75.9			5.0	14.5	0.2	523

Appendix Table 14. Length composition of the major age classes of sockeye salmon collected in the Kenai River, 1976-1982[1].

Age Class-	Year	Male Average Length[1] (mm)	Male Standard Deviation	Male Sample Size	Female Average Length (mm)	Female Standard Deviation	Female Sample Size	Total Average Length (mm)	Total Standard Deviation	Total Sample Size	Ratio Male:Female
4_2	1982	483	8.9[2]	70	505	12.6[2]	32	490	10.0[2]	63	2.2:1
	1981	493	52	85	513	48	73	502	--	158	1.2:1
	1980	482	51	168	494	36	100	486	--	268	1.7:1
	1979	493	62	41	528	38	33	508	55	74	1.2:1
	1976	500	49	41	516	36	22	506	--	63	1.9:1
5_2	1982	596	1.9[2]	723	572	1.3[2]	841	583	1.6	1,564	0.9:1
	1981	590	30	290	569	26	430	577	--	720	0.7:1
	1980	580	39	180	561	30	192	570	--	372	0.9:1
	1979	605	35	122	587	26	114	596	32	236	1.1:1
	1978	--	--	287	--	--	388	597	30	675	0.7:1
	1977	615	31	40	593	24	77	601	--	117	0.5:1
	1976	594	48	16	590	16	25	592	--	41	0.6:1
5_3	1982	530	13.8[2]	21	522	8.1[2]	30	525	10.5[2]	51	0.7:1
	1980	525	46	13	534	25	35	532	--	48	0.4:1
	1979	545	45	17	543	38	23	544	41	40	0.7:1
	1976	543	36	14	533	35	10	539	--	24	1.4:1
6_3	1982	598	4.9[2]	46	580	8.4[2]	21	592	6.0[2]	67	2.2:1
	1980	589	22	67	579	29	80	584	--	147	0.8:1
	1977	616	21	4	607	17	4	612	--	8	1.0:1

[1] Length measured from mid-eye to fork-of-tail.

[2] Standard error.

Appendix Table 15. Weight composition of the major age classes of sockeye salmon collected in the Kenai River, 1981-1982.

Age Class-	Year	Male			Female			Total		
		Average Weight (kg)	Standard Deviation	Sample Size	Average Weight (kg)	Standard Deviation	Sample Size	Average Weight (kg)	Standard Deviation	Sample Size
4_2	1982	1.9	0.15[1]	47	2.0	0.2[1]	16	1.9	0.17[1]	63
	1981	2.1	0.6	85	2.3	0.6	73	2.2	--	158
5_2	1982	4.0	0.06[1]	413	3.3	0.04[1]	444	3.7	0.05[1]	857
	1981	3.8	0.6	290	3.2	0.5	430	3.4	--	720
5_3	1982	2.3	0.31[1]	14	2.2	0.22[1]	17	2.2	0.26[1]	31
	1981	2.3	0.5	42	2.3	0.4	46	2.3	--	88
6_3	1982	3.6	0.16[1]	26	3.3	0.26[1]	13	3.5	0.19[1]	39
	1981	3.3	0.6	20	3.3	0.5	27	3.3	--	47

[1] Standard error.

Appendix Table 16. Total number of fish targets and estimated species composition recorded by side-scan sonar in the Kasilof River, 10 June through 3 August 1982[1].

Date	Fish Targets	Estimated Species Composition[2] (Number of Fish)							
		Sockeye	Cumulative	Pink	Cumulative	Coho	Cumulative	Chinook	Cumulative
6/10	247	247	247	0	0	0	0	0	0
6/11	288	288	535	0	0	0	0	0	0
6/12	318	318	853	0	0	0	0	0	0
6/13	320	320	1,173	0	0	0	0	0	0
6/14	292	292	1,465	0	0	0	0	0	0
6/15	250	250	1,715	0	0	0	0	0	0
6/16	309	309	2,024	0	0	0	0	0	0
6/17	239	239	2,263	0	0	0	0	0	0
6/18	391	391	2,654	0	0	0	0	0	0
6/19	2,132	2,132	4,786	0	0	0	0	0	0
6/20	1,456	1,456	6,242	0	0	0	0	0	0
6/21	983	977	7,219	6	6	0	0	0	0
6/22	502	498	7,717	4	10	0	0	0	0
6/23	459	456	8,173	3	13	0	0	0	0
6/24	654	650	8,823	4	17	0	0	0	0
6/25	653	649	9,472	4	21	0	0	0	0
6/26	465	462	9,934	3	24	0	0	0	0
6/27	517	514	10,448	3	27	0	0	0	0
6/28	535	531	10,979	4	31	0	0	0	0
6/29	645	641	11,620	4	35	0	0	0	0
6/30	898	892	12,512	6	41	0	0	0	0
7/01	1,634	1,613	14,125	21	62	0	0	0	0
7/02	2,247	2,218	16,343	29	91	0	0	0	0
7/03	2,495	2,463	18,806	32	123	0	0	0	0
7/04	1,878	1,853	20,659	25	148	0	0	0	0
7/05	1,371	1,353	22,012	18	166	0	0	0	0
7/06	1,315	1,272	23,284	25	191	0	0	18	18
7/07	1,271	1,229	24,513	24	215	0	0	18	36
7/08	1,722	1,665	26,178	33	248	0	0	24	60
7/09	1,955	1,891	28,069	37	285	0	0	27	87
7/10	1,484	1,435	29,504	28	313	0	0	21	108
7/11	2,512	2,429	31,933	48	361	0	0	36	144

-Continued-

Appendix Table 16. Total number of fish targets and estimated species composition recorded by side-scan sonar in the Kasilof River, 10 June through 3 August 1982[1] (continued).

Date	Fish Targets	Estimated Species Composition[2] (Number of Fish)							
		Sockeye	Cumulative	Pink	Cumulative	Coho	Cumulative	Chinook	Cumulative
7/12	3,746	3,621	35,554	71	432	0	0	53	197
7/13	3,736	3,612	39,166	71	503	0	0	54	251
7/14	5,474	5,411	44,577	63	566	0	0	0	251
7/15	8,256	8,161	52,738	95	661	0	0	0	251
7/16	11,851	11,771	64,509	80	741	0	0	0	251
7/17	8,358	8,302	72,811	56	797	0	0	0	251
7/18	15,942	15,734	88,545	138	935	70	70	0	251
7/19	15,593	15,402	103,947	191	1,126	0	70	0	251
7/20	11,820	11,820	115,767	0	1,126	0	70	0	251
7/21	10,952	10,818	126,585	0	1,126	134	204	0	251
7/22	7,650	7,466	134,051	184	1,310	0	204	0	251
7/23	2,861	2,792	136,843	69	1,379	0	204	0	251
7/24	1,764	1,722	138,565	42	1,421	0	204	0	251
7/25	2,755	2,688	141,253	67	1,488	0	204	0	251
7/26	2,996	2,867	144,120	115	1,603	0	204	14	265
7/27	3,428	3,279	147,399	132	1,735	0	204	16	281
7/28	3,438	3,289	150,688	132	1,867	0	204	17	298
7/29	2,136	2,044	152,732	82	1,949	0	204	10	308
7/30	1,764	1,682	154,414	72	2,021	0	204	10	318
7/31	1,662	1,584	155,998	68	2,089	0	204	10	328
8/01	1,920	1,830	157,828	78	2,167	0	204	11	339
8/02	1,906	1,817	159,645	78	2,245	0	204	12	351
8/03	1,678	1,600	161,245	69	2,314	0	204	10	361
Total	164,123	161,245		2,314		204		361	
[3]	18,994	180,239							

[1] Round-off error estimated (worst case) +/- 1 fish per day.
[2] Based on relative abundance in fishwheel catch.
[3] Remainder of run extrapolated based on normal run timing.

Appendix Table 17. Total number of fish targets and estimated species composition recorded by north bank sonar in the Kasilof River, 10 June through 3 August 1982[1].

Date	Fish Targets	Estimated Species Composition[2] (Number of Fish)							
		Sockeye	Cumulative	Pink	Cumulative	Coho	Cumulative	Chinook	Cumulative
6/10	60	60	60	0	0	0	0	0	0
6/11	63	63	123	0	0	0	0	0	0
6/12	91	91	214	0	0	0	0	0	0
6/13	178	178	392	0	0	0	0	0	0
6/14	183	183	575	0	0	0	0	0	0
6/15	173	173	748	0	0	0	0	0	0
6/16	210	210	958	0	0	0	0	0	0
6/17	149	149	1,107	0	0	0	0	0	0
6/18	186	186	1,293	0	0	0	0	0	0
6/19	1,166	1,166	2,459	0	0	0	0	0	0
6/20	709	709	3,168	0	0	0	0	0	0
6/21	502	499	3,667	3	3	0	0	0	0
6/22	245	243	3,910	2	5	0	0	0	0
6/23	189	188	4,098	1	6	0	0	0	0
6/24	387	385	4,483	2	8	0	0	0	0
6/25	366	364	4,847	2	10	0	0	0	0
6/26	250	248	5,095	2	12	0	0	0	0
6/27	227	226	5,321	1	13	0	0	0	0
6/28	284	282	5,603	2	15	0	0	0	0
6/29	354	352	5,955	2	17	0	0	0	0
6/30	459	456	6,411	3	20	0	0	0	0
7/01	891	880	7,291	11	31	0	0	0	0
7/02	1,525	1,505	8,796	20	51	0	0	0	0
7/03	1,352	1,335	10,131	17	68	0	0	0	0
7/04	981	968	11,099	13	81	0	0	0	0
7/05	615	607	11,706	8	89	0	0	0	0
7/06	794	768	12,474	15	104	0	0	11	11
7/07	753	728	13,202	14	118	0	0	11	22
7/08	1,145	1,107	14,309	22	140	0	0	16	38
7/09	1,430	1,383	15,692	27	167	0	0	20	58
7/10	1,036	1,002	16,694	20	187	0	0	15	73
7/11	1,876	1,814	18,508	36	223	0	0	27	100

-Continued-

Appendix Table 17. Total number of fish targets and estimated species composition recorded by north bank sonar in the Kasilof River, 10 June through 3 August 1982[1] (continued).

Date	Fish Targets	Estimated Species Composition[2] (Number of Fish)							
		Sockeye	Cumulative	Pink	Cumulative	Coho	Cumulative	Chinook	Cumulative
7/12	2,946	2,848	21,356	56	279	0	0	42	142
7/13	3,062	2,960	24,316	58	337	0	0	44	186
7/14	4,331	4,281	28,597	50	387	0	0	0	186
7/15	6,703	6,626	35,223	77	464	0	0	0	186
7/16	9,774	9,708	44,931	66	530	0	0	0	186
7/17	6,202	6,160	51,091	42	572	0	0	0	186
7/18	13,035	12,865	63,956	113	685	57	57	0	186
7/19	13,398	13,234	77,190	164	849	0	57	0	186
7/20	9,181	9,181	86,371	0	849	0	57	0	186
7/21	8,795	8,687	95,058	0	849	108	165	0	186
7/22	5,821	5,681	100,739	140	989	0	165	0	186
7/23	2,031	1,982	102,721	49	1,038	0	165	0	186
7/24	1,002	978	103,699	24	1,062	0	165	0	186
7/25	1,812	1,768	105,467	44	1,106	0	165	0	186
7/26	1,669	1,597	107,064	64	1,107	0	165	8	194
7/27	2,093	2,002	109,066	81	1,257	0	165	10	204
7/28	2,210	2,114	111,180	85	1,336	0	165	11	215
7/29	1,254	1,200	112,380	48	1,384	0	165	6	221
7/30	1,035	987	113,367	42	1,426	0	165	6	227
7/31	1,045	996	114,363	43	1,469	0	165	6	233
8/01	1,175	1,120	115,483	48	1,517	0	165	7	240
8/02	1,113	1,061	116,544	46	1,563	0	165	7	247
8/03	900	858	117,402	37	1,600	0	165	5	252
Total	119,416	117,402		1,600		165		252	

[1] Round-off error estimated (worst case) +/- 1 fish per day.

[2] Based on relative abundance in fishwheel catch.

Appendix Table 18. Total number of fish targets and estimated species composition recorded by south bank in the Kasilof River, 10 June through 3 August 1982[1].

Date	Fish Targets	Estimated Species Composition[2] (Number of Fish)							
		Sockeye	Cumulative	Pink	Cumulative	Coho	Cumulative	Chinook	Cumulative
6/10	187	187	187	0	0	0	0	0	0
6/11	225	225	412	0	0	0	0	0	0
6/12	227	227	639	0	0	0	0	0	0
6/13	142	142	781	0	0	0	0	0	0
6/14	109	109	890	0	0	0	0	0	0
6/15	77	77	967	0	0	0	0	0	0
6/16	99	99	1,066	0	0	0	0	0	0
6/17	90	90	1,156	0	0	0	0	0	0
6/18	205	205	1,361	0	0	0	0	0	0
6/19	966	966	2,327	0	0	0	0	0	0
6/20	747	747	3,074	0	0	0	0	0	0
6/21	481	478	3,552	3	3	0	0	0	0
6/22	257	255	3,807	2	5	0	0	0	0
6/23	270	268	4,075	2	7	0	0	0	0
6/24	267	265	4,340	2	9	0	0	0	0
6/25	287	285	4,625	2	11	0	0	0	0
6/26	215	214	4,839	1	12	0	0	0	0
6/27	290	288	5,127	2	14	0	0	0	0
6/28	251	249	5,376	2	16	0	0	0	0
6/29	291	289	5,665	2	18	0	0	0	0
6/30	439	436	6,101	3	21	0	0	0	0
7/01	743	733	6,834	10	31	0	0	0	0
7/02	722	713	7,547	9	40	0	0	0	0
7/03	1,143	1,128	8,675	15	55	0	0	0	0
7/04	897	885	9,560	12	67	0	0	0	0
7/05	756	746	10,306	10	77	0	0	0	0
7/06	521	504	10,810	10	87	0	0	7	7
7/07	518	501	11,311	10	97	0	0	7	14
7/08	577	558	11,869	11	108	0	0	8	22
7/09	525	508	12,377	10	118	0	0	7	29
7/10	448	433	12,810	8	126	0	0	6	35
7/11	636	615	13,425	12	138	0	0	9	44

-Continued-

Appendix Table 18. Total number of fish targets and estimated species composition recorded by south bank in the Kasilof River, 10 June through 3 August 1982[1] (continued).

Date	Fish Targets	Estimated Species Composition[2] (Number of Fish)							
		Sockeye	Cumulative	Pink	Cumulative	Coho	Cumulative	Chinook	Cumulative
7/12	800	773	14,198	15	153	0	0	11	55
7/13	674	652	14,850	13	166	0	0	10	65
7/14	1,143	1,130	15,980	13	179	0	0	0	65
7/15	1,553	1,535	17,515	18	197	0	0	0	65
7/16	2,077	2,063	19,578	14	211	0	0	0	65
7/17	2,156	2,142	21,720	14	225	0	0	0	65
7/18	2,907	2,869	24,589	25	250	13	13	0	65
7/19	2,195	2,168	26,757	27	277	0	13	0	65
7/20	2,639	2,639	29,396	0	277	0	13	0	65
7/21	2,157	2,131	31,527	0	277	26	39	0	65
7/22	1,829	1,785	33,312	44	321	0	39	0	65
7/23	830	810	34,122	20	341	0	39	0	65
7/24	762	744	34,866	18	359	0	39	0	65
7/25	943	920	35,786	23	382	0	39	0	65
7/26	1,327	1,270	37,056	51	433	0	39	6	71
7/27	1,335	1,277	38,333	51	484	0	39	6	77
7/28	1,228	1,175	39,508	47	531	0	39	6	83
7/29	882	844	40,352	34	565	0	39	4	87
7/30	729	695	41,047	30	595	0	39	4	91
7/31	617	588	41,635	25	620	0	39	4	95
8/01	745	710	42,345	30	650	0	39	4	99
8/02	793	756	43,101	32	682	0	39	5	104
8/03	778	742	43,843	32	714	0	39	5	109
Total	44,707	43,343		714		39		109	

[1] Round-off error estimated (worst case) +/- 1 fish per day.

[2] Based on relative abundance in fishwheel catch.

Appendix Table 19. Summary of Kasilof sonar-site tagged sockeye salmon recovered in Tustumena Lake tributaries, 1982.

Tag No.	Date Tagged	Date Recovered
Nikolai Creek		
00829	7/01/82	8/04/82
00858	7/01/82	8/04/82
00870	7/01/82	8/04/82
00913	7/03/82	8/04/82
00920	7/03/82	8/04/82
01801	7/04/82	8/04/82
01802	7/04/82	8/04/82
01806	7/04/82	8/04/82
01844	7/05/82	8/19/82
01858	7/05/82	8/04/82
01884	7/06/82	8/04/82
01908	7/07/82	8/04/82
01969	7/11/82	8/04/82
01971	7/11/82	8/04/82
01982	7/11/82	8/04/82
01985	7/11/82	8/04/82
CF03407	7/15/82	8/04/82
CF03441	7/15/82	8/18/82
CF03523	7/16/82	8/04/82
CF03604	7/17/82	8/19/82
CF03636	7/17/82	8/04/82
CF03637	7/17/82	8/04/82
CF03699	7/17/82	8/19/82
01823	7/19/82	8/04/82
01942	7/19/82	8/04/82
01711	7/21/82	8/19/82
01717	7/21/82	8/19/82
Crystal Creek		
CF03536	7/16/82	8/16/82
CF03936	7/18/82	8/05/82
00794	7/19/82	8/16/82
01786	7/23/82	8/16/82
Clear Creek		
00831	7/01/82	8/03/82
00832	7/01/82	8/05/82
CF03259	7/13/82	8/24/82
CF03503	7/16/82	8/22/82
CF03592	7/17/82	8/24/82
01495	7/19/82	8/22/82
01735	7/19/82	8/24/82
01987	7/19/82	8/17/82
01981	7/29/82	8/24/82
Seepage Creek		
CF03449	7/15/82	8/17/82
CF03722	7/17/82	8/04/82
01728	7/21/82	8/17/82
Crooked Creek		
01994	7/29/82	8/10/82
00722		8/17/82
Moose Creek		
00800	6/26/82	8/03/82
00996	6/27/82	8/03/82
00908	7/03/82	8/03/82
00914	7/03/82	8/18/82
00916	7/03/82	8/03/82
01930	7/08/82	8/03/82
CF03230	7/12/82	8/03/82
CF03180	7/13/82	8/03/82
CF03184	7/13/82	8/03/82
CF03388	7/15/82	8/18/82
CF03537	7/16/82	8/18/82
CF03585	7/16/82	8/26/82
CF03470	7/17/82	8/18/82
CF03591	7/17/82	8/03/82
CF03595	7/17/82	8/03/82
CF03659	7/17/82	8/18/82
CF03710	7/17/82	8/26/82
CF03724	7/17/82	8/26/82
CF03732	7/17/82	8/03/82
CF03734	7/17/82	8/03/82
CF03785	7/18/82	8/03/82
CF03815	7/18/82	8/18/82
CF03928	7/18/82	8/18/82
01712	7/19/82	8/18/82
01808	7/19/82	8/18/82
01809	7/19/82	8/18/82
01667	7/20/82	8/18/82
01668	7/20/82	8/18/82
01775	7/23/82	8/18/82
01790	7/23/82	8/18/82
01802	7/24/82	8/26/82
01835	7/25/82	8/26/82
01852	7/25/82	8/18/82
01899	7/27/82	8/18/82
01907	7/27/82	8/18/82

-Continued-

Appendix Table 19. Summary of Kasilof sonar-site tagged sockeye salmon recovered in Tustumena Lake tributaries, 1982 (continued).

Tag No.	Date Tagged	Date Recovered	Tag No.	Date Tagged	Date Recovered
Bear Creek					
00988	6/27/82	7/29/82	CF03412	7/15/82	8/08/82
00807	6/29/82	7/25/82	CF03413	7/15/82	8/08/82
00811	6/30/82	8/05/82	CF03433	7/15/82	8/05/82
00834	7/01/82	7/28/82	CF03438	7/15/82	8/08/82
00846	7/01/82	7/25/82	CF03448	7/15/82	7/30/82
00884	7/02/82	7/25/82	CF03456	7/15/82	8/07/82
00971	7/04/82	7/25/82	CF03469	7/15/82	8/03/82
01839	7/05/82	7/29/82	CF03471	7/15/82	8/03/82
01841	7/05/82	7/29/82	CF03473	7/15/82	8/08/82
01852	7/05/82	8/05/82	CF03476	7/15/82	8/13/82
01853	7/05/82	8/14/82	CF03477	7/15/82	8/04/82
01857	7/05/82	7/25/82	CF03482	7/15/82	8/16/82
01865	7/05/82	7/25/82	CF03484	7/15/82	7/29/82
01871	7/05/82	7/28/82	CF03486	7/15/82	8/09/82
01880	7/06/82	7/28/82	CF03487	7/15/82	8/05/82
01899	7/06/82	8/05/82	CF03488	7/15/82	8/08/82
01914	7/08/82	7/25/82	CF03489	7/15/82	8/08/82
01919	7/08/82	7/29/82	CF03495	7/15/82	8/08/82
01924	7/08/82	8/05/82	CF03499	7/15/82	8/14/82
01927	7/08/82	8/06/82	CF03716	7/15/82	8/08/82
01944	7/09/82	7/29/82	CF03507	7/16/82	7/28/82
01963	7/10/82	8/01/82	CF03508	7/16/82	8/05/82
01964	7/10/82	8/14/82	CF03511	7/16/82	8/14/82
01968	7/11/82	7/29/82	CF03512	7/16/82	8/08/82
01995	7/12/82	8/02/82	CF03524	7/16/82	8/09/82
01998	7/12/82	7/29/82	CF03529	7/16/82	8/07/82
CF03225	7/12/82	8/04/82	CF03534	7/16/82	8/06/82
CF03227	7/12/82	8/07/82	CF03539	7/16/82	8/05/82
CF03245	7/12/82	8/16/82	CF03541	7/16/82	7/30/82
CF03181	7/13/82	7/29/82	CF03545	7/16/82	8/05/82
CF03187	7/13/82	8/12/82	CF03547	7/16/82	8/03/82
CF03191	7/13/82	8/08/82	CF03549	7/16/82	8/12/82
CF03273	7/14/82	8/01/82	CF03557	7/16/82	8/05/82
CF03276	7/14/82	8/09/82	CF03570	7/16/82	8/14/82
CF03282	7/14/82	8/09/82	CF03571	7/16/82	8/09/82
CF03285	7/14/82	8/02/82	CF03580	7/16/82	7/30/82
CF03302	7/14/82	8/04/82	CF03581	7/16/82	8/06/82
CF03311	7/14/82	8/07/82	CF03584	7/16/82	8/08/82
CF03315	7/14/82	8/05/82	CF03594	7/17/82	8/07/82
CF03319	7/14/82	8/07/82	CF03607	7/17/82	8/06/82
CF03342	7/14/82	8/15/82	CF03616	7/17/82	8/03/82
CF03355	7/15/82	8/05/82	CF03618	7/17/82	8/08/82
CF03369	7/15/82	8/04/82	CF03619	7/17/82	8/04/82
CF03378	7/15/82	7/25/82	CF03622	7/17/82	8/05/82
CF03380	7/15/82	8/06/82	CF03625	7/17/82	8/05/82
CF03382	7/15/82	8/12/82	CF03635	7/17/82	8/04/82
CF03387	7/15/82	8/06/82	CF03643	7/17/82	8/09/82

-Continued-

Appendix Table 19. Summary of Kasilof sonar-site tagged sockeye salmon recovered in Tustumena Lake tributaries, 1982 (continued).

Tag No.	Date Tagged	Date Recovered	Tag No.	Date Tagged	Date Recovered
Bear Creek, cont.					
CF03650	7/17/82	8/09/82	0512	7/19/82	8/07/82
CF03655	7/17/82	8/05/82	01521	7/19/82	8/07/82
CF03692	7/17/82	8/09/82	01701	7/19/82	8/05/82
CF03696	7/17/82	8/04/82	01702	7/19/82	8/07/82
CF03705	7/17/82	8/03/82	01704	7/19/82	8/04/82
CF03706	7/17/82	8/04/82	01711	7/19/82	8/03/82
CF03707	7/17/82	8/03/82	01713	7/19/82	8/02/82
CF03709	7/17/82	8/12/82	01723	7/19/82	8/13/82
CF03723	7/17/82	8/16/82	01728	7/19/82	8/15/82
CF03746	7/18/82	8/02/82	01739	7/19/82	8/05/82
CF03748	7/18/82	8/14/82	01744	7/19/82	8/14/82
CF03754	7/18/82	8/06/82	01747	7/19/82	8/05/82
CF03760	7/18/82	8/06/82	01748	7/19/82	8/16/82
CF03770	7/18/82	8/08/82	01750	7/19/82	8/02/82
CF03774	7/18/82	7/30/82	01953	7/19/82	8/08/82
CF03786	7/18/82	8/02/82	01954	7/19/82	8/05/82
CF03787	7/18/82	8/16/82	01956	7/18/82	8/07/82
CF03799	7/18/82	8/06/82	01976	7/19/82	8/06/82
CF03806	7/18/82	8/04/82	01978	7/19/82	8/07/82
CF03816	7/18/82	8/03/82	01981	7/19/82	8/13/82
CF03819	7/18/82	8/05/82	01983	7/19/82	8/05/82
CF03829	7/18/82	7/28/82	01992	7/19/82	8/02/82
CF03840	7/18/82	8/06/82	01997	7/19/82	8/05/82
CF03843	7/18/82	8/08/82	01999	7/19/82	8/16/82
CF03844	7/18/82	8/04/82	01964	7/20/82	8/12/82
CF03847	7/18/82	8/05/82	CF03047	7/20/82	8/03/82
CF03849	7/18/82	8/05/82	01701	7/21/82	8/13/82
CF03852	7/18/82	8/02/82	01709	7/21/82	8/11/82
CF03870	7/18/82	8/05/82	01719	7/21/82	8/02/82
CF03877	7/18/82	8/08/82	01720	7/21/82	8/16/82
CF03889	7/18/82	8/14/82	01721	7/21/82	8/16/82
CF03896	7/18/82	8/04/82	01729	7/21/82	8/14/82
CF03900	7/18/82	8/02/82	01684	7/22/82	8/13/82
CF03902	7/18/82	8/12/82	01741	7/22/82	8/16/82
CF03902	7/18/82	8/08/82	01744	7/22/82	8/15/82
CF03917	7/18/82	8/03/82	01764	7/23/82	8/12/82
CF03919	7/18/82	8/04/82	01768	7/23/82	8/14/82
CF03920	7/18/82	8/05/82	01769	7/23/82	8/16/82
CF03921	7/18/82	8/16/82	01784	7/23/82	8/09/82
CF03925	7/18/82	8/06/82	01785	7/23/82	8/09/82
CF03954	7/18/82	8/07/82	01805	7/24/82	8/16/82
CF03958	7/18/82	8/03/82	01823	7/24/82	8/05/82
CF03987	7/18/82	8/09/82	01824	7/24/82	8/07/82
00795	7/19/82	8/13/82	01836	7/25/82	8/15/82
01321	7/19/82	8/15/82	01874	7/26/82	8/16/82
01485	7/19/82	8/09/82	01875	7/26/82	8/15/82
01509	7/19/82	8/08/82	01877	7/26/82	8/03/82

-Continued-

Appendix Table 19. Summary of Kasilof sonar-site tagged sockeye salmon recovered in Tustumena Lake tributaries, 1982 (continued).

Tag No.	Date Tagged	Date Recovered
Bear Creek, cont.		
1880	7/26/82	8/16/82
01886	7/26/82	8/14/82
02000	7/29/82	8/14/82
00482	7/31/82	8/14/82
01469		8/12/82
01815		8/12/82
Glacier Flats Creek		
00857	7/02/82	8/02/82
01864	7/05/82	8/17/82
01912	7/07/82	8/05/82
01953	7/10/82	8/17/82
CF03201	7/12/82	8/21/82
CF03204	7/12/82	8/11/82
CF03249	7/13/82	8/07/82
CF03274	7/14/82	8/12/82
CF03343	7/14/82	8/05/82
CF03336	7/14/82	8/19/82
CF03424	7/15/82	8/14/82
CF03461	7/15/82	8/18/82
CF03462	7/15/82	8/18/82
CF03504	7/16/82	8/17/82
CF03515	7/16/82	8/04/82
CF03533	7/16/82	8/14/82
CF03554	7/16/82	8/17/82
CF03572	7/16/82	8/11/82
CF03597	7/17/82	8/21/82
CF03626	7/17/82	8/21/82
CF03630	7/17/82	8/08/82
CF03641	7/17/82	8/17/82
CF03645	7/17/82	8/11/82
CF03662	7/17/82	8/18/82
CF03691	7/17/82	8/19/82
CF03708	7/17/82	8/04/82
CF03737	7/18/82	8/21/82
CF03781	7/18/82	8/08/82
CF03803	7/18/82	8/10/82
CF03804	7/18/82	8/20/82
CF03836	7/18/82	8/17/82
03850	7/18/82	8/17/82
CF03893	7/18/82	8/11/82
CF03898	7/18/82	8/05/82
CF03948	7/18/82	8/08/82
CF03949	7/18/82	8/19/82
CF03966	7/18/82	8/15/82
CF03969	7/18/82	8/12/82
CF03984	7/18/82	8/20/82
00796	7/19/82	8/17/82
00944	7/19/82	8/09/82
00948	7/18/82	8/19/82
01706	7/19/82	8/26/82
01718	7/19/82	8/15/82
01719	7/19/82	8/15/82
01814	7/19/82	8/19/82
01655	7/20/82	8/05/82
01661	7/20/82	8/19/82
01968	7/20/82	8/12/82
01972	7/20/82	8/21/82
01975	7/20/82	8/13/82
CF03045	7/20/82	8/03/82
01703	7/21/82	8/20/82
01731	7/21/82	8/11/82
01689	7/22/82	8/14/82
01694	7/22/82	8/17/82
01740	7/22/82	8/13/82
01751	7/22/82	8/13/82
01761	7/23/82	8/19/82
01788	7/23/82	8/21/82
01843	7/25/82	8/09/82
01847	7/25/82	8/19/82
01858	7/26/82	8/18/82
01862	7/26/82	8/11/82
01891	7/26/82	8/20/82
01893	7/26/82	8/18/82
01905	7/27/82	8/20/82
01916	7/27/82	8/18/82
01917	7/27/82	8/19/82
00453	7/29/82	8/17/82
00456	7/29/82	8/12/82
00462	7/29/82	8/21/82
01975	7/29/82	8/18/82
01976	7/29/82	8/21/82
01990	7/29/82	8/19/82
00481	7/31/82	8/19/82
CF03146	8/03/82	8/20/82

Appendix Table 20. 1982 north bank of Kasilof River side-scan sonar counts by sector.

DATE	SECTOR 1	2	3	4	5	6	7	8	9	10	11	12	TOTAL	CUMULATIVE TOTAL
6 10	5	1	0	0	0	0	0	2	2	13	20	7	50	50
6 11	17	5	1	1	1	0	4	3	0	3	8	13	56	106
6 12	11	11	4	2	1	3	1	1	5	7	13	21	80	186
6 13	12	16	2	4	0	0	4	3	13	38	27	18	137	323
6 14	41	17	9	3	0	0	2	4	13	33	33	27	182	505
6 15	27	17	4	0	0	0	0	3	11	23	46	42	173	678
6 16	12	20	12	2	0	0	2	6	16	40	28	72	210	888
6 17	8	7	4	1	0	0	1	4	15	29	34	41	144	1032
6 18	32	21	13	0	1	0	0	3	15	16	35	51	187	1219
6 19	119	320	256	21	1	0	8	19	44	84	121	173	1166	2385
6 20	143	159	103	13	1	0	6	6	20	61	72	125	709	3094
6 21	88	107	57	14	1	0	6	9	24	57	78	64	505	3599
6 22	23	44	31	5	2	1	3	5	8	46	28	51	247	3846
6 23	27	29	30	4	1	0	3	1	5	21	29	39	189	4035
6 24	90	61	54	4	0	0	4	9	14	41	42	68	387	4422
6 25	115	54	17	4	1	1	10	2	15	42	46	59	366	4788
6 26	66	24	15	5	1	1	5	5	15	28	30	56	251	5039
6 27	54	17	12	0	0	0	2	6	7	37	32	60	227	5266
6 28	58	31	13	4	0	0	4	4	15	44	41	70	284	5550
6 29	79	28	16	3	1	0	4	7	20	57	55	84	354	5904
6 30	61	59	29	1	3	1	8	16	26	86	73	96	459	6363
7 1	155	144	62	8	1	2	30	30	52	130	116	161	891	7254
7 2	452	300	84	14	4	0	14	29	92	165	170	201	1525	8779
7 3	319	314	70	11	8	5	14	34	64	112	146	252	1349	10128
7 4	159	213	64	11	1	0	8	16	58	87	146	218	981	11109
7 5	102	124	35	6	1	1	3	24	53	72	101	91	613	11722
7 6	118	138	42	5	0	1	7	20	58	77	130	198	794	12516
7 7	212	190	31	5	1	0	1	11	32	49	95	126	753	13269
7 8	344	255	51	1	1	0	9	18	75	89	138	164	1145	14414
7 9	533	321	64	4	1	0	7	22	27	84	181	187	1431	15845
7 10	235	197	138	26	17	11	25	40	50	78	77	142	1036	16881
7 11	231	425	424	88	15	3	66	70	78	98	129	249	1876	18757
7 12	644	1148	374	78	16	6	64	63	65	86	96	307	2947	21704
7 13	784	1208	353	87	14	2	65	87	105	87	103	167	3062	24766
7 14	1470	1633	309	62	23	3	53	66	130	114	145	322	4330	29096
7 15	2348	2814	508	87	27	3	74	116	100	91	103	432	6703	35799
7 16	3620	3791	676	117	15	9	118	158	190	166	146	771	9777	45576
7 17	2263	2168	661	118	34	17	92	121	151	124	98	356	6203	51779
7 18	4637	4826	909	185	51	24	195	256	330	297	170	1155	13035	64814
7 19	4741	4679	916	160	54	13	236	312	371	372	296	1248	13398	78212
7 20	3588	2842	498	85	25	11	169	259	273	265	246	920	9181	87393
7 21	2925	3142	493	108	20	8	125	136	144	138	145	1411	8795	96188
7 22	1844	2602	514	102	45	11	87	90	82	98	59	297	5831	102019
7 23	471	709	295	80	31	26	77	83	71	64	35	87	2029	104048
7 24	245	322	176	30	1	2	48	40	30	36	37	35	1002	105050
7 25	456	588	268	43	3	1	75	100	77	88	58	55	1812	106862
7 26	510	489	219	43	4	3	60	88	99	66	41	77	1699	108561
7 27	653	694	218	32	3	1	72	99	93	114	56	57	2092	110653
7 28	732	611	174	41	5	5	101	98	95	160	86	102	2210	112863
7 29	343	326	120	20	8	4	39	73	72	60	66	123	1254	114117
7 30	283	222	116	24	4	2	54	64	45	68	61	92	1035	115152
7 31	282	247	109	20	4	1	35	51	88	64	65	79	1045	116197
8 1	418	248	111	18	3	0	51	59	41	80	71	75	1175	117372
8 2	350	204	97	28	5	1	28	46	77	99	63	115	1113	118485
8 3	243	149	71	21	2	0	23	35	37	112	79	128	900	119385
	37798	39331	9932	1859	462	183	2202	2932	3708	4696	4645	11637	119385	

Appendix Table 21. 1982 south bank of Kasilof River side-scan sonar counts by sector.

DATE	SECTOR 1	2	3	4	5	6	7	8	9	10	11	12	TOTAL	CUMULATIVE TOTAL
6 10	10	20	14	4	0	0	13	13	16	24	26	47	187	187
6 11	5	33	32	9	2	2	11	14	19	31	22	45	225	412
6 12	12	50	24	5	0	0	14	11	9	25	34	43	227	639
6 13	11	14	19	6	2	2	3	14	12	21	16	22	142	781
6 14	15	6	8	2	0	0	2	3	5	27	20	21	109	890
6 15	7	14	12	3	0	0	4	4	4	9	3	13	73	963
6 16	8	9	13	4	2	1	5	11	7	6	9	24	99	1062
6 17	20	3	6	3	0	0	7	4	6	3	7	29	90	1152
6 18	32	47	20	7	2	0	4	14	17	17	25	20	205	1357
6 19	97	244	166	27	9	1	33	43	65	121	75	85	966	2323
6 20	208	259	77	11	0	3	12	19	24	40	26	68	747	3070
6 21	87	122	59	17	0	1	17	19	19	52	49	39	481	3551
6 22	29	36	39	5	3	1	5	8	13	48	28	43	258	3809
6 23	10	26	36	3	2	2	9	22	17	45	35	62	269	4078
6 24	13	17	24	6	3	1	16	4	28	48	25	81	266	4344
6 25	9	28	13	4	2	1	13	15	28	57	55	62	287	4631
6 26	14	16	7	0	0	0	15	8	22	40	38	54	214	4845
6 27	5	21	10	4	1	0	11	18	51	54	57	60	292	5137
6 28	8	12	10	0	2	2	16	26	27	56	48	46	253	5390
6 29	5	16	5	4	1	0	14	12	47	62	46	81	293	5683
6 30	6	14	25	6	9	3	15	24	66	104	67	104	443	6126
7 1	22	47	38	11	3	1	25	53	117	153	139	159	768	6894
7 2	52	47	28	10	3	0	23	52	106	145	105	140	711	7605
7 3	40	113	46	10	6	5	29	83	200	224	167	218	1141	8746
7 4	38	69	28	5	3	1	19	30	117	211	164	212	897	9643
7 5	68	81	35	7	0	3	22	14	65	143	128	190	756	10399
7 6	25	39	27	4	1	1	17	24	64	86	84	149	521	10920
7 7	25	53	15	5	1	1	12	22	27	72	60	186	479	11399
7 8	32	61	22	5	1	1	5	23	67	100	101	159	577	11976
7 9	73	141	26	6	3	2	10	11	49	66	84	57	528	12504
7 10	56	118	38	4	3	0	9	18	33	46	86	37	448	12952
7 11	78	122	56	12	4	2	17	23	33	75	98	120	640	13592
7 12	136	214	88	15	2	1	21	31	58	73	87	74	800	14392
7 13	125	175	63	10	2	2	9	12	37	87	77	72	671	15063
7 14	317	320	94	10	3	3	20	30	65	69	97	115	1143	16206
7 15	475	372	131	24	8	1	36	34	57	120	136	159	1553	17759
7 16	603	409	132	43	5	3	51	52	160	200	214	204	2076	19835
7 17	856	480	111	29	8	2	20	40	114	101	130	265	2156	21991
7 18	1019	551	167	33	6	1	60	86	183	213	213	374	2906	24897
7 19	617	377	81	21	5	1	48	76	164	241	255	311	2197	27094
7 20	820	486	108	23	2	3	46	84	168	291	285	323	2639	29733
7 21	570	522	122	41	8	6	45	47	117	253	195	232	2158	31891
7 22	443	639	164	47	9	0	19	39	81	131	106	151	1829	33720
7 23	176	251	76	17	3	2	12	17	35	80	56	105	830	34550
7 24	169	200	86	29	1	2	12	26	33	82	53	69	762	35312
7 25	248	277	80	22	4	1	19	15	43	75	74	85	943	36255
7 26	317	329	109	35	12	25	26	34	78	140	116	100	1321	37576
7 27	313	315	103	33	10	3	28	23	75	142	133	156	1334	38910
7 28	293	314	101	26	3	4	43	43	63	96	135	107	1228	40138
7 29	186	246	56	15	10	5	22	41	53	90	72	98	894	41032
7 30	197	133	39	11	4	4	19	14	25	70	91	123	730	41762
7 31	170	102	39	8	5	5	12	11	27	64	88	84	615	42377
8 1	176	121	18	10	7	2	10	40	41	74	103	144	746	43123
8 2	261	116	30	12	5	1	24	21	32	78	103	114	797	43920
8 3	201	112	29	7	4	3	8	11	35	101	121	145	777	44697
	9808	8959	3007	730	194	117	1037	1486	3124	5082	4867	6286	44697	

Appendix Table 22. 1982 north bank of Kasilof River side-scan sonar counts by sector, five-day time periods.

DATE	SECTOR 1	2	3	4	5	6	7	8	9	10	11	12	TOTAL	CUMULATIVE TOTAL
6 10-14	86	50	16	10	2	3	11	13	33	94	101	86	505	505
6 15-19	198	385	289	24	2	0	11	35	101	192	264	379	1880	2385
6 20-24	371	400	275	40	5	1	22	30	71	226	249	347	2037	4422
6 25-29	372	154	73	16	3	2	25	24	72	208	204	329	1482	5904
6 30- 4	1146	1030	309	45	17	8	74	125	292	580	651	928	5205	11109
7 5- 9	1309	1028	223	21	4	2	27	95	245	371	645	766	4736	15845
7 10-14	3364	4611	1598	341	85	25	273	326	428	463	550	1187	13251	29096
7 15-19	17609	18278	3670	667	181	66	715	963	1142	1050	813	3962	49116	78212
7 20-24	9073	9617	1976	405	122	58	506	608	600	601	522	2750	26838	105050
7 25-29	2694	2708	999	179	23	14	347	458	436	488	307	414	9067	114117
7 30- 3	1576	1070	504	111	18	4	191	255	288	423	339	489	5268	119385
	37798	39331	9932	1859	462	183	2202	2932	3708	4696	4645	11637	119385	

Appendix Table 23. 1982 south bank of Kasilof River side-scan sonar counts by sector, five-day time periods.

DATE	SECTOR 1	2	3	4	5	6	7	8	9	10	11	12	TOTAL	CUMULATIVE TOTAL
6 10-14	53	123	97	26	4	4	43	55	61	128	118	178	890	890
6 15-19	164	317	219	44	13	2	53	76	99	156	119	171	1433	2323
6 20-24	347	460	235	42	8	8	59	72	101	233	163	293	2021	4344
6 25-29	41	93	45	12	6	3	69	79	175	269	244	303	1339	5683
6 30- 4	158	290	165	42	24	10	111	242	606	837	642	833	3960	9643
7 5- 9	223	375	125	27	6	8	66	94	272	467	457	741	2861	12504
7 10-14	712	949	339	51	14	8	76	114	226	350	445	418	3702	16206
7 15-19	3570	2189	622	150	32	8	215	288	678	875	948	1313	10888	27094
7 20-24	2178	2098	556	157	23	13	134	213	434	837	695	880	8218	35312
7 25-29	1357	1481	449	131	39	38	138	156	312	543	530	546	5720	41032
7 30- 3	1005	584	155	48	25	15	73	97	160	387	506	610	3665	44697
	9808	8959	3007	730	194	117	1037	1486	3124	5082	4867	6286	44697	

Appendix Table 24. 1982 north bank of Kasilof River side-scan sonar counts by hour.

DATE	HOUR 1	2	3	4	5	6	7	8	9	10	11	12	13	14	15	16	17	18	19	20	21	22	23	24	TOTAL
6 10	1	0	2	5	1	2	3	0	2	2	3	2	8	0	0	3	0	2	1	1	3	6	3	0	50
6 11	2	1	6	5	1	0	0	0	1	1	1	1	0	3	4	0	0	1	0	6	6	4	5	8	56
6 12	3	4	9	6	1	3	3	3	1	7	0	0	0	2	4	5	2	3	5	1	1	3	5	9	80
6 13	7	1	3	1	15	10	5	6	8	4	0	2	1	4	7	7	3	4	8	9	4	2	18	8	137
6 14	12	16	5	8	8	5	0	1	16	2	3	13	6	5	10	7	6	4	10	7	2	7	13	16	182
6 15	14	12	6	8	9	10	11	6	2	2	4	6	6	3	6	3	4	8	3	5	4	11	15	15	173
6 16	14	5	7	22	27	5	12	8	2	8	0	3	7	18	14	3	10	3	7	1	5	15	8	6	210
6 17	10	5	1	17	20	6	3	9	2	1	6	7	0	4	7	6	1	6	1	4	1	7	6	14	144
6 18	10	7	4	10	20	4	14	7	9	1	2	7	3	5	13	6	10	5	6	7	3	2	13	19	187
6 19	7	18	14	22	91	104	107	92	88	42	46	34	19	21	13	20	15	39	49	27	58	70	70	100	1,166
6 20	57	49	25	30	29	21	11	19	35	39	23	26	31	31	35	46	49	42	19	19	9	17	14	33	709
6 21	32	29	16	8	5	20	20	22	23	22	26	26	40	16	24	10	10	12	20	26	31	25	23	19	505
6 22	12	7	10	5	24	7	15	16	10	24	12	12	2	14	7	1	5	7	5	7	11	7	9	18	247
6 23	11	7	9	14	10	11	10	9	5	6	3	5	2	3	3	5	9	4	4	8	16	10	13	12	189
6 24	41	40	20	29	41	23	26	22	22	10	9	7	10	2	1	8	4	6	8	5	7	10	11	25	387
6 25	34	50	50	34	26	21	15	27	10	3	6	3	3	1	3	12	6	2	2	3	2	10	15	28	366
6 26	29	23	22	17	31	10	7	9	2	6	2	9	3	4	4	4	4	12	2	2	4	8	7	30	251
6 27	25	17	15	12	11	14	13	9	8	4	3	2	4	2	10	3	3	13	1	10	13	11	14	10	227
6 28	20	26	22	16	19	24	17	10	9	9	0	2	8	14	10	5	12	6	6	6	5	13	7	18	284
6 29	35	37	18	13	17	20	13	10	16	5	1	6	11	8	2	13	7	10	16	14	7	11	24	40	354
6 30	31	45	12	17	5	8	5	6	11	5	1	5	7	8	11	26	11	15	20	20	35	23	42	90	459
7 1	91	56	43	37	30	34	40	21	17	11	54	30	18	25	17	31	40	24	21	41	35	38	57	80	891
7 2	119	108	64	71	60	27	31	38	26	25	30	37	17	38	24	25	22	46	74	89	143	135	132	144	1,525
7 3	162	87	84	163	105	50	58	29	35	27	54	27	25	21	29	22	28	30	24	25	49	60	65	90	1,349
7 4	94	85	63	65	64	41	51	44	53	41	23	21	9	25	19	24	21	21	19	32	28	52	31	55	981
7 5	65	43	38	52	48	27	45	23	10	10	9	20	2	2	10	21	19	15	33	21	30	18	22	30	613
7 6	31	34	36	39	50	38	21	41	36	28	15	30	28	25	19	11	21	27	25	29	47	66	48	49	794
7 7	40	30	32	23	47	48	29	16	11	4	17	4	2	6	6	13	20	26	54	29	42	53	112	89	753
7 8	70	70	60	49	45	47	34	34	20	29	26	28	25	21	32	36	52	44	79	81	56	61	63	83	1,145
7 9	63	64	60	29	70	64	39	51	30	52	49	47	37	54	89	65	74	91	86	91	73	72	53	28	1,431
7 10	22	44	37	62	81	69	60	44	51	39	27	42	42	51	66	52	37	42	31	44	24	19	22	28	1,036
7 11	39	48	36	52	42	43	47	56	72	90	90	109	77	67	64	75	59	106	78	123	72	138	157	136	1,876
7 12	121	67	123	84	168	120	107	136	117	147	59	131	136	109	110	114	121	149	121	112	121	161	140	173	2,947
7 13	81	160	135	144	111	93	89	151	142	135	78	99	131	107	79	99	90	100	131	124	152	195	257	179	3,062
7 14	166	206	146	225	223	126	124	165	224	161	112	188	224	249	218	172	148	150	170	194	212	199	153	175	4,330

-Continued-

Appendix Table 24. 1982 north bank of Kasilof River side-scan sonar counts by hour (continued).

DATE	HOUR 1	2	3	4	5	6	7	8	9	10	11	12	13	14	15	16	17	18	19	20	21	22	23	24	TOTAL
7 15	183	181	224	204	209	235	245	273	341	240	290	234	246	266	348	404	300	254	334	332	349	371	367	273	6,703
7 16	268	302	233	368	452	465	503	412	465	667	648	579	592	730	506	429	408	339	264	321	353	235	144	94	9,777
7 17	107	124	159	345	317	408	460	537	542	423	193	196	156	177	187	268	282	208	225	286	197	192	108	106	6,203
7 18	138	209	262	441	648	766	692	481	640	539	706	737	658	550	522	444	597	517	713	783	686	591	476	239	13,035
7 19	332	267	285	479	785	749	894	956	1020	799	429	352	331	347	502	459	582	564	684	469	496	614	669	334	13,398
7 20	254	153	208	581	854	733	652	481	256	306	250	223	394	479	538	658	490	591	404	237	133	107	96	103	9,181
7 21	89	119	111	239	501	619	683	718	744	736	614	390	427	249	384	478	364	301	245	166	186	205	158	69	8,795
7 22	60	103	113	198	437	441	485	550	302	253	216	248	334	214	212	217	177	185	142	168	261	206	181	128	5,831
7 23	75	91	51	33	59	124	140	106	66	113	84	84	77	90	110	137	68	109	100	70	51	76	70	45	2,029
7 24	44	16	28	39	35	55	20	38	29	18	31	20	52	30	30	26	51	57	74	83	80	75	45	26	1,002
7 25	23	37	45	21	40	82	82	119	128	86	96	86	81	98	107	82	103	88	82	84	69	85	53	35	1,812
7 26	18	28	40	58	100	109	83	71	103	62	68	62	75	66	103	100	137	104	79	79	79	33	21	21	1,699
7 27	15	15	18	39	65	116	116	95	126	115	146	99	144	140	105	104	165	106	84	82	58	38	44	57	2,092
7 28	34	38	37	34	98	139	132	127	128	125	143	99	150	130	154	185	123	52	56	57	52	55	42	20	2,210
7 29	47	36	31	31	35	44	51	44	57	61	63	56	46	102	89	80	96	60	62	49	53	26	14	21	1,254
7 30	10	14	18	12	38	49	56	56	53	72	65	50	74	45	50	77	54	58	50	30	39	22	20	23	1,035
7 31	19	8	28	27	40	69	70	55	24	38	63	49	38	54	59	66	47	64	54	61	40	29	27	16	1,045
8 1	9	11	29	36	49	68	86	80	48	59	48	51	67	38	65	72	61	76	74	58	27	33	14	16	1,175
8 2	18	20	9	61	65	78	79	37	40	28	17	32	45	70	77	98	62	73	70	39	51	21	13	10	1,113
8 3	16	22	20	24	46	39	49	44	35	34	38	34	62	51	52	68	65	57	34	28	22	38	20	2	900
	3330	3295	3182	4664	6428	6543	6663	6420	6273	5776	5002	4672	4993	4894	5170	5405	5155	4938	4969	4705	4593	4591	4229	3495	119,385

Appendix Table 25. 1982 south bank of Kasilof River side-scan sonar counts by hour.

DATE	HOUR 1	2	3	4	5	6	7	8	9	10	11	12	13	14	15	16	17	18	19	20	21	22	23	24	TOTAL
6 10	3	5	9	10	17	20	25	10	5	5	10	2	3	2	3	3	2	6	8	9	11	8	8	3	187
6 11	6	8	3	4	1	15	48	35	21	7	6	6	5	3	3	6	6	5	8	14	3	7	4	1	225
6 12	8	7	0	9	15	43	34	34	20	7	5	5	2	0	7	6	1	1	2	7	5	2	2	5	227
6 13	6	2	4	6	15	29	14	8	5	4	0	3	5	2	0	12	2	1	0	2	6	2	6	8	142
6 14	6	11	0	6	10	1	5	3	2	7	0	0	0	12	0	11	2	0	2	0	3	3	5	20	109
6 15	3	1	0	1	13	15	8	10	4	1	0	3	0	0	0	1	0	0	4	0	0	5	2	2	73
6 16	13	14	3	9	19	5	4	1	2	1	4	5	4	1	0	1	0	1	0	2	4	1	2	3	99
6 17	10	0	5	9	11	16	5	4	2	0	0	2	0	1	0	0	1	1	1	2	1	3	5	11	90
6 18	7	9	12	8	23	24	13	9	7	1	7	4	3	3	10	3	7	5	12	9	2	11	6	10	205
6 19	9	9	14	63	98	107	144	84	85	43	28	25	33	7	3	9	10	9	13	22	22	42	52	35	966
6 20	9	18	4	24	41	65	50	56	77	67	14	12	23	18	24	30	39	42	35	21	19	19	24	16	747
6 21	20	20	9	20	11	30	36	41	40	36	9	33	33	15	14	18	4	15	16	18	17	14	10	2	481
6 22	12	3	7	20	26	22	24	14	2	6	6	12	4	2	1	4	7	2	8	10	13	16	16	21	258
6 23	17	14	12	4	26	22	17	8	16	3	2	4	4	4	9	3	2	9	14	18	12	15	22	12	269
6 24	12	11	7	21	19	27	20	18	11	2	7	4	12	12	6	1	3	6	6	7	22	17	7	8	266
6 25	16	17	20	15	17	24	39	22	10	9	4	11	20	0	3	7	0	3	0	3	11	18	6	12	287
6 26	11	3	13	17	26	13	8	10	14	9	2	1	1	10	1	3	2	3	7	8	12	9	12	19	214
6 27	8	17	9	17	15	11	3	15	25	18	22	12	9	2	8	10	6	8	7	5	12	21	19	13	292
6 28	9	2	1	11	23	29	11	15	4	8	5	0	1	9	12	4	2	4	9	1	13	13	26	41	253
6 29	35	13	15	10	9	10	10	10	10	6	12	4	7	5	11	9	6	7	11	9	20	15	23	26	293
6 30	12	13	20	16	18	10	30	3	14	9	10	8	14	5	10	25	35	17	10	20	13	23	57	51	443
7 1	37	39	44	37	50	39	47	24	11	21	18	34	34	15	28	19	27	30	19	38	30	43	39	45	768
7 2	37	21	30	47	47	53	44	42	22	19	27	19	12	30	17	18	10	26	32	36	37	49	14	22	711
7 3	26	23	11	60	84	60	58	56	25	16	48	73	31	40	32	50	66	62	39	47	47	58	66	63	1141
7 4	46	45	46	35	45	24	42	31	30	37	14	14	26	20	26	13	18	17	38	45	24	43	101	117	897
7 5	82	111	103	69	87	59	27	19	16	6	9	3	6	10	14	9	10	11	17	23	12	10	31	12	756
7 6	4	15	12	29	31	46	53	45	30	21	21	10	19	11	29	30	12	17	5	15	25	18	18	5	521
7 7	5	9	10	16	12	24	30	21	4	2	5	2	10	24	8	7	12	21	30	31	61	83	30	22	479
7 8	28	21	25	36	44	38	54	66	61	41	16	20	8	4	11	10	5	8	17	7	17	11	10	19	577
7 9	15	23	29	20	23	40	27	19	21	19	28	12	10	10	24	18	18	31	17	19	25	35	18	27	528
7 10	18	26	21	29	9	19	19	4	2	3	4	4	8	3	3	11	3	12	13	24	42	68	36	67	448
7 11	33	13	43	17	44	36	25	27	22	14	30	32	11	29	17	14	24	16	24	14	28	40	46	41	640
7 12	64	40	35	19	12	36	34	39	31	31	19	19	24	26	24	37	24	30	39	44	55	27	42	49	800
7 13	25	36	32	40	57	47	18	24	21	20	21	12	20	21	24	22	21	23	25	26	26	48	39	23	671
7 14	44	21	33	13	37	25	44	57	95	61	70	87	56	35	32	55	52	51	49	57	46	62	43	18	1143

-Continued-

Appendix Table 25. 1982 south bank of Kasilof River side-scan sonar counts by hour (continued).

DATE	HOUR 1	2	3	4	5	6	7	8	9	10	11	12	13	14	15	16	17	18	19	20	21	22	23	24	TOTAL
7 15	39	40	29	35	23	26	53	53	61	86	98	113	75	74	65	85	90	70	85	79	78	111	51	34	1553
7 16	38	15	25	59	38	31	34	51	122	117	137	112	129	185	141	128	87	144	98	107	98	75	86	19	2076
7 17	15	31	37	86	176	123	204	177	148	117	93	76	45	81	122	84	75	77	70	62	115	81	32	29	2156
7 18	34	44	40	110	190	147	186	214	224	222	128	108	118	98	110	113	124	120	95	160	156	113	15	37	2906
7 19	21	24	50	104	137	156	183	128	129	110	76	86	96	87	132	102	94	54	81	86	62	64	49	86	2197
7 20	81	47	45	81	185	245	273	234	152	123	81	84	64	124	146	161	95	78	103	71	73	33	32	28	2639
7 21	51	26	44	57	157	265	296	178	108	83	137	117	111	51	73	61	64	47	34	24	61	41	34	38	2158
7 22	31	20	54	50	91	91	85	83	103	65	73	90	102	72	56	105	91	118	83	93	88	90	61	34	1829
7 23	20	18	27	28	23	53	32	29	20	20	41	27	60	47	37	32	49	31	41	46	61	43	24	21	830
7 24	13	12	32	37	71	37	46	62	35	28	44	38	40	23	24	41	50	25	9	17	25	29	9	15	762
7 25	17	21	15	8	19	20	23	26	20	23	15	38	76	43	51	55	66	52	66	64	85	77	25	38	943
7 26	24	27	23	57	90	111	67	58	64	62	47	96	93	68	85	33	33	36	63	63	52	31	20	18	1321
7 27	14	18	7	15	45	107	98	56	62	77	100	91	120	113	73	48	40	55	53	29	42	29	21	21	1334
7 28	41	32	24	32	66	96	71	83	54	78	91	57	71	62	56	52	57	22	47	42	29	15	22	28	1228
7 29	13	7	23	22	21	52	68	62	40	54	47	50	52	52	44	57	64	32	40	45	28	6	10	5	894
7 30	17	32	27	21	31	47	61	53	36	53	35	64	30	27	21	34	22	19	17	10	15	23	26	9	730
7 31	10	17	14	21	34	57	73	32	11	11	31	27	20	41	28	15	41	29	21	20	19	28	9	6	615
8 1	8	13	15	33	23	39	56	30	34	43	42	42	48	45	42	49	37	22	33	28	23	11	15	15	746
8 2	14	14	12	19	45	50	54	40	27	35	39	45	54	32	26	60	46	45	24	31	50	15	7	13	797
8 3	12	15	12	22	33	45	59	48	43	35	57	23	23	30	43	43	41	32	32	25	36	30	18	20	777
	1209	1113	1196	1664	2533	2882	3092	2581	2260	2002	1895	1881	1885	1746	1789	1837	1705	1608	1632	1715	1892	1804	1413	1363	44697

Appendix Table 26. 1982 north bank of Kasilof River side-scan sonar counts by hour, five-day time period.

DATE	HOUR 1-2	3-4	5-6	7-8	9-10	11-12	13-14	15-16	17-18	19-20	21-22	23-24	TOTAL	CUMULATIVE TOTAL
6 10-14	47	50	46	21	44	25	29	47	25	48	38	85	505	505
6 15-19	102	111	296	269	157	115	86	91	101	110	176	266	1880	2385
6 20-24	285	166	191	170	196	149	151	140	148	121	143	177	2037	4422
6 25-29	296	219	193	130	72	34	58	66	75	62	84	193	1482	5904
6 30- 4	878	619	424	323	251	282	193	228	258	365	598	786	5205	11109
7 5- 9	510	418	484	333	230	245	202	302	389	528	518	577	4736	15845
7 10-14	954	1044	1076	979	1178	935	1193	1049	1002	1128	1293	1420	13251	29096
7 15-19	2111	3000	5034	5453	5676	4364	4053	4069	4051	4411	4084	2810	49116	78212
7 20-24	1004	1601	3858	3873	2823	2160	2346	2790	2393	1689	1380	921	26838	105050
7 25-29	291	354	828	920	991	918	1032	1109	1034	714	548	328	9067	114117
7 30- 3	147	264	541	612	431	447	544	684	617	498	322	161	5268	119385
	6625	7846	12971	13083	12049	9674	9887	10575	10093	9674	9184	7724	119385	

Appendix Table 27. 1982 south bank of Kasilof River side-scan sonar counts by hour, five-day time periods.

DATE	HOUR 1-2	3-4	5-6	7-8	9-10	11-12	13-14	15-16	17-18	19-20	21-22	23-24	TOTAL	CUMULATIVE TOTAL
6 10-14	62	51	166	216	83	37	34	51	26	52	50	62	890	890
6 15-19	75	124	331	282	146	78	52	27	34	65	91	128	1433	2323
6 20-24	136	128	289	284	260	103	127	110	129	153	164	138	2021	4344
6 25-29	131	128	177	143	113	73	64	68	41	60	144	197	1339	5683
6 30- 4	299	346	430	377	204	265	227	238	308	324	367	575	3960	9643
7 5- 9	313	349	404	361	221	126	112	160	145	181	297	192	2861	12504
7 10-14	320	282	322	291	300	298	233	239	256	315	442	404	3702	16206
7 15-19	301	575	1047	1283	1336	1027	988	1082	935	923	953	438	10888	27094
7 20-24	319	455	1218	1318	737	732	694	736	648	521	544	296	8218	35312
7 25-29	214	226	627	612	534	632	750	554	457	512	394	208	5720	41032
7 30- 3	152	196	404	506	328	405	350	361	334	241	250	138	3665	44697
	2322	2860	5415	5673	4262	3776	3631	3626	3313	3347	3696	2776	44697	

Appendix Table 28. Daily fishwheel catch by species on the south bank of the Kasilof River, 10 June through 3 August 1982[1] [2].

Date	Sockeye	Pink	Coho	Chinook
6/10/82	0	0	0	0
6/11/82	0	0	0	0
6/12/82	0	0	0	0
6/13/82	11	0	0	0
6/14/82	4	0	0	0
6/15/82	8	0	0	0
6/16/82	13	0	0	0
6/17/82	6	0	0	0
6/18/82	21	0	0	0
6/19/82	52	0	0	0
6/20/82	56	0	0	0
6/21/82	48	0	0	0
6/22/82	13	0	0	0
6/23/82	9	0	0	0
6/24/82	19	0	0	0
6/25/82	24	0	0	0
6/26/82	13	0	0	0
6/27/82	13	1	0	0
6/28/82	6	0	0	0
6/29/82	6	0	0	0
6/30/82	8	0	0	0
7/01/82	33	0	0	0
7/02/82	23	1	0	0
7/03/82	35	0	0	0
7/04/82	33	0	0	0
7/05/82	29	1	0	0
7/06/82	28	0	0	0
7/07/82	10	1	0	0
7/08/82	27	0	0	1
7/09/82	13	0	0	1
7/10/82	12	0	0	0
7/11/82	20	3	0	1
7/12/82	40	0	0	0
7/13/82	54	0	0	0
7/14/82	67	0	0	0
7/15/82	104	2	0	0
7/16/82	112	1	0	0
7/17/82	184	1	0	0
7/18/82	227	2	1	0
7/19/82	161	2	0	0
7/20/82	296	0	0	0
7/21/82	161	0	2	0
7/22/82	53	0	0	0
7/23/82	46	0	0	0
7/24/82	37	0	0	0
7/25/82	26	4	0	0
7/26/82	45	0	0	0
7/27/82	38	1	0	1

-Continued-

Appendix Table 28. Daily fishwheel catch by species on the south bank of the Kasilof River, 10 June through 3 August 1982 [1] [2] (continued).

Date	Sockeye	Pink	Coho	Chinook
7/28/82	62	3	0	0
7/29/82	54	4	0	0
7/30/82	40	2	0	1
7/31/82	22	0	0	0
8/01/82	20	1	0	0
8/02/82	37	1	0	0
8/03/82	44	3	0	0
Total	2,523	34	3	5

[1] Fishwheel catch adjusted for 24 hours : $\frac{\text{daily catch x 24 hours}}{\text{hours open}}$

[2] Two fishwheels operated on the south bank from 23 June through 19 July. Catches presented for this time period are combined totals.

Appendix Table 29. Length composition of the major age classes of sockeye salmon collected in the Kasilof River, 1976-1982.

Age Class-Year		Male			Female			Total			
		Average Length[1] (mm)	Standard Deviation	Sample Size	Average Length (mm)	Standard Deviation	Sample Size	Average Length (mm)	Standard Deviation	Sample Size	Ratio Male:Female
4_2	1982	481	2.22[2]	285	466	1.78[2]	235	474	2.0[2]	475	1.2:1
	1981	503	31	241	492	30	146	499	--	387	1.7:1
	1980[3]	474	33	189	464	24	376	467	--	565	0.5:1
	1979	489	27	175	487	23	139	488	26	314	1.3:1
	1978	--	--	69	--	--	70	501	37	139	1.0:1
	1976	486	20	26	472	69	40	478	--	66	0.7:1
5_2	1982	549	1.40[2]	377	542	1.09[2]	428	545	1.24[2]	805	0.9:1
	1981	566	24	422	558	27	369	562	--	791	1.1:1
	1980[3]	531	40	35	516	26	115	520	--	150	0.3:1
	1979	578	29	82	562	33	99	569	32	181	0.8:1
	1978	--	--	47	--	--	55	554	24	102	0.9:1
	1976	528	30	5	547	15	4	536	--	9	1.3:1
5_3	1982	479	3.15[2]	65	472	2.69[2]	81	475	2.89[2]	146	0.8:1
	1976	485	21	12	487	18	34	486	--	46	0.4:1
6_3	1982	548	4.32[2]	41	543	3.78[2]	40	546	4.07[2]	86	1.0:1

[1] Lengths measured from mid-eye to fork-of-tail.

[2] Standard error.

[3] Sockeye salmon collected by fishwheel.

Appendix Table 30. Weight composition of the major age classes of sockeye salmon collected in the Kasilof River, 1981-1982.

Age Class-Year		Male			Female			Total		
		Average Weight (kg)	Standard Deviation	Sample Size	Average Weight (kg)	Standard Deviation	Sample Size	Average Weight (kg)	Standard Deviation	Sample Size
4_2	1982	1.8	0.03 [1]	235	1.5	0.02 [1]	240	1.7	0.03 [1]	475
	1981	2.2	0.7	241	1.9	0.4	146	2.1	--	387
5_2	1982	2.7	0.02	377	2.44	0.02 [1]	428	2.56	0.02 [1]	805
	1981	3.0	0.9	422	2.9	0.5	369	3.0	--	791
5_3	1982	1.7	0.05 [1]	65	1.6	0.04 [1]	81	1.7	0.04 [1]	146
	1981	2.3	0.5	40	2.0	0.4	33	2.2	--	73
6_3	1982	2.6	0.07 [1]	41	2.3	0.5 [1]	34	2.5	0.06 [1]	75

[1] Standard error.

Appendix Table 31. Daily sonar counts and expanded oscilloscope counts recorded on the Kasilof River, 1982.

	North Bank		South Bank	
Date	Oscilloscope Estimate	Sonar Count	Oscilloscope Estimate	Sonar Count
6/11	124	56	572	225
6/12	240	80	594	227
6/13	164	137	192	142
6/14	122	182	122	109
6/15	106	173	148	73
6/16	236	210	90	99
6/17	178	149	48	90
6/18	210	186	300	205
6/19	776	1,166	934	966
6/20	1,038	709	986	747
6/21	492	502	738	481
6/22	196	245	242	258
6/23	214	189	330	269
6/24	396	387	476	266
6/25	526	366	152	287
6/26	328	251	238	214
6/27	248	227	254	292
6/28	274	284	258	253
6/29	188	354	200	293
6/30	230	459	344	443
7/01	658	891	606	768
7/02	1,204	1,525	680	711
7/03	1,574	1,349	932	1,141
7/04	734	981	998	897
7/05	506	613	572	756
7/06	788	794	558	521
7/07	796	753	444	479
7/08	1,280	1,145	936	577
7/09	1,357	1,431	480	528
7/10	1,240	1,036	398	448
7/11	1,081	1,876	572	640
7/12	2,099	2,947	616	800
7/13	2,396	3,062	680	671
7/14	3,440	4,331	1,090	1,143
7/15	5,640	6,703	1,496	1,553
7/16	9,738	9,774	2,204	2,076
7/17	5,536	6,202	1,484	2,156
7/18	12,081	13,035	2,864	2,906
7/19	13,472	13,398	2,012	2,197
7/20	9,144	9,181	2,462	2,639
7/21	7,686	8,795	3,297	2,158
7/22	5,414	5,821	2,122	1,829
7/23	3,230	2,031	1,298	830

-Continued-

Appendix Table 31. Daily sonar counts and expanded oscilloscope counts recorded on the Kasilof River, 1982 (continued).

	North Bank		South Bank	
Date	Oscilloscope Estimate	Sonar Count	Oscilloscope Estimate	Sonar Count
7/24	1,346	1,002	1,046	762
7/25	2,202	1,812	916	943
7/26	1,802	1,669	1,172	1,321
7/27	1,926	2,093	1,300	1,334
7/28	1,958	2,210	1,212	1,228
7/29	1,294	1,254	952	894
7/30	1,002	1,035	854	730
7/31	1,062	1,045	466	615
8/01	1,468	1,175	542	746
8/02	1,136	1,113	832	797
8/03	682	900	1,086	777
Totals	113,258	119,335	46,397	44,510

Appendix Table 32. Total number of fish targets and estimated species composition recorded by side-scan sonar in the Crescent River, 1 July through 31 July 1982[1].

Date	Fish Targets	Estimated Species Composition[2] (Number of Fish) Sockeye	Cum	Pink	Cum
7/01	14	14	14	0	0
7/02	11	11	25	0	0
7/03	20	20	45	0	0
7/04	32	32	77	0	0
7/05	27	27	104	0	0
7/06	33	33	137	0	0
7/07	139	139	276	0	0
7/08	937	937	1,213	0	0
7/09	2,158	2,158	3,371	0	0
7/10	2,432	2,432	5,803	0	0
7/11	1,676	1,676	7,479	0	0
7/12	1,756	1,749	9,228	7	7
7/13	1,972	1,965	11,193	7	14
7/14	1,603	1,598	12,791	5	19
7/15	1,643	1,637	14,428	6	25
7/16	804	801	15,229	3	28
7/17	1,641	1,635	16,864	6	34
7/18	2,457	2,448	19,312	9	43
7/19	2,924	2,913	22,225	11	54
7/20	4,906	4,888	27,113	18	72
7/21	4,326	4,310	31,423	16	88
7/22	3,134	3,122	34,545	12	100
7/23	2,973	2,962	37,507	11	111
7/24	2,864	2,864	40,371	0	111
7/25	1,661	1,661	42,032	0	111
7/26	2,266	2,266	44,298	0	111
7/27	1,914	1,914	46,212	0	111
7/28	991	991	47,203	0	111
7/29	882	882	48,085	0	111
7/30	590	590	48,675	0	111
7/31	416	416	49,091	0	111
Total	49,202	49,091		111	
[3]	9,866	58,957			

[1] Round-off error estimated (worst case) +/- 1 fish per day.

[2] Based on relative abundance in seine catch.

[3] Remainder of run extrapolated based on normal run timing.

Appendix Table 33. 1982 north bank of Crescent River side-scan sonar counts by sector.

DATE	SECTOR 1	2	3	4	5	6	7	8	9	10	11	12	TOTAL	CUMULATIVE TOTAL
7 2	0	2	1	0	0	0	1	0	0	0	0	0	4	4
7 3	1	0	3	1	2	0	0	0	0	0	0	0	7	11
7 4	7	2	1	0	4	0	0	0	1	1	1	0	17	28
7 5	4	2	2	1	0	0	0	0	3	0	0	0	12	40
7 6	0	2	0	2	2	2	1	1	0	1	0	0	11	51
7 7	11	7	11	10	27	8	7	6	3	5	1	2	98	149
7 8	224	212	130	103	139	33	1	0	0	0	0	0	842	991
7 9	2	2	2	2	2	2	2	2	2	2	2	2	24	1015
7 10	2	2	2	2	2	2	2	2	2	2	2	2	24	1039
7 11	158	100	122	149	178	157	40	19	17	16	16	16	988	2027
7 12	50	114	326	217	304	209	64	20	1	2	0	0	1307	3334
7 13	96	135	334	179	214	160	34	7	2	1	0	1	1163	4497
7 14	30	76	252	166	214	148	62	6	0	0	0	0	954	5451
7 15	18	147	446	124	149	116	36	10	3	0	0	0	1049	6500
7 16	9	67	213	57	86	90	36	6	2	0	1	0	567	7067
7 17	29	163	267	89	97	85	30	9	1	2	0	0	772	7839
7 18	170	523	446	118	76	61	17	4	1	0	0	0	1416	9255
7 19	209	582	482	87	114	87	20	4	3	4	1	0	1593	10848
7 20	301	893	585	140	119	98	10	4	2	1	0	0	2153	13001
7 21	394	875	507	67	49	41	6	0	0	0	0	0	1939	14940
7 22	307	721	390	57	41	24	5	1	0	1	0	0	1547	16487
7 23	161	564	429	77	79	61	12	2	1	1	0	0	1387	17874
7 24	276	627	375	75	87	50	3	4	0	0	0	0	1497	19371
7 25	91	295	212	50	55	58	15	6	0	0	0	0	782	20153
7 26	172	380	198	37	60	44	8	3	1	1	0	0	904	21057
7 27	160	359	249	45	63	46	10	0	1	0	0	0	933	21990
7 28	56	233	205	53	68	42	16	2	0	1	1	0	677	22667
7 29	50	175	153	19	42	39	22	3	0	1	1	0	505	23172
7 30	50	111	105	29	46	47	15	3	1	3	0	0	410	23582
7 31	36	74	82	14	40	66	27	5	1	0	0	0	345	23927
	3074	7445	6530	1970	2359	1776	502	129	48	45	26	23	23927	

-Continued-

Appendix Table 34. 1982 south bank of Crescent River side-scan sonar counts by sector.

DATE	SECTOR 1	2	3	4	5	6	7	8	9	10	11	12	TOTAL	CUMULATIVE TOTAL
7 2	0	0	1	0	1	0	0	1	1	1	1	0	6	6
7 3	8	0	1	1	1	1	0	0	0	0	0	0	12	18
7 4	4	3	0	0	1	0	0	3	1	0	1	0	13	31
7 5	0	3	4	1	0	3	1	0	0	1	0	0	13	44
7 6	1	2	0	0	3	6	5	1	2	0	0	0	20	64
7 7	4	7	6	4	1	3	2	5	3	0	1	0	36	100
7 8	9	19	26	15	10	5	3	2	7	0	0	2	98	198
7 9	67	247	162	57	25	18	2	5	14	0	1	3	601	799
7 10	59	313	209	4	4	6	4	3	0	1	1	1	605	1404
7 11	2	2	2	2	2	2	2	2	2	2	2	2	24	1428
7 12	2	2	2	2	2	2	2	2	2	2	2	2	24	1452
7 13	2	2	2	2	2	2	2	2	2	2	2	2	24	1476
7 14	5	110	256	123	87	50	15	2	0	0	0	0	648	2124
7 15	5	82	229	138	74	46	14	6	0	0	0	0	594	2718
7 16	6	28	63	44	45	38	7	6	0	0	0	0	237	2955
7 17	1	102	237	201	189	89	35	9	3	1	1	1	869	3824
7 18	16	109	205	221	274	146	42	24	8	3	0	0	1048	4872
7 19	30	244	385	278	218	128	35	11	4	0	0	1	1334	6206
7 20	364	1008	802	332	158	67	14	5	0	0	1	0	2751	8957
7 21	114	1178	787	205	72	26	4	1	0	0	0	0	2387	11344
7 22	80	544	577	253	101	28	3	1	0	0	0	0	1587	12931
7 23	24	530	600	209	146	60	8	9	0	0	0	0	1586	14517
7 24	27	570	510	149	73	24	9	3	1	0	0	1	1367	15884
7 25	34	213	251	176	105	72	14	11	3	0	0	0	879	16763
7 26	62	453	492	189	93	53	11	6	0	0	0	2	1361	18124
7 27	31	303	390	157	58	26	8	3	1	0	1	0	978	19102
7 28	2	101	146	39	18	5	2	1	0	0	0	0	314	19416
7 29	26	99	133	66	39	9	3	2	0	0	0	0	377	19793
7 30	9	47	70	23	14	9	7	0	1	0	0	0	180	19973
7 31	8	15	27	8	9	2	1	0	0	0	1	0	71	20044
	1002	6336	6575	2899	1825	926	255	126	55	13	15	17	20044	

Appendix Table 35. 1982 north bank of Crescent River side-scan sonar counts by sector, three-day time periods.

DATE	SECTOR 1	2	3	4	5	6	7	8	9	10	11	12	TOTAL	CUMULATIVE TOTAL
7 2- 4	8	4	5	1	6	0	1	0	1	1	1	0	28	28
7 5- 7	15	11	13	13	29	10	8	7	6	6	1	2	121	149
7 8-10	228	216	134	107	143	37	5	4	4	4	4	4	890	1039
7 11-13	304	349	782	545	696	526	138	46	20	19	16	17	3458	4497
7 14-16	57	290	911	347	449	354	134	22	5	0	1	0	2570	7067
7 17-19	408	1268	1195	294	287	233	67	17	5	6	1	0	3781	10848
7 20-22	1002	2489	1482	264	209	163	21	5	2	2	0	0	5639	16487
7 23-25	528	1486	1016	202	221	169	30	12	1	1	0	0	3666	20153
7 26-28	388	972	652	135	191	132	34	5	2	2	1	0	2514	22667
7 29-31	136	360	340	62	128	152	64	11	2	4	1	0	1260	23927
	3074	7445	6530	1970	2359	1776	502	129	48	45	26	23	23927	

Appendix Table 36. 1982 south bank of Crescent River side-scan sonar counts by sector, three-day time periods.

DATE	SECTOR 1	2	3	4	5	6	7	8	9	10	11	12	TOTAL	CUMULATIVE TOTAL
7 2- 4	12	3	2	1	3	1	0	4	2	1	2	0	31	31
7 5- 7	5	12	10	5	4	12	8	6	5	1	1	0	69	100
7 8-10	135	579	397	76	39	29	9	10	21	1	2	6	1304	1404
7 11-13	6	6	6	6	6	6	6	6	6	6	6	6	72	1476
7 14-16	16	220	548	305	206	134	36	14	0	0	0	0	1479	2955
7 17-19	47	455	827	700	681	363	112	44	15	4	1	2	3251	6206
7 20-22	558	2730	2166	790	331	121	21	7	0	0	1	0	6725	12931
7 23-25	85	1313	1361	534	324	156	31	23	4	0	0	1	3832	16763
7 26-28	95	857	1028	385	169	84	21	10	1	0	1	2	2653	19416
7 29-31	43	161	230	97	62	20	11	2	1	0	1	0	628	20044
	1002	6336	6575	2899	1825	926	255	126	55	13	15	17	20044	

Appendix Table 37. 1982 north bank of Crescent River side-scan sonar counts by hour.

DATE	HOUR 1	2	3	4	5	6	7	8	9	10	11	12	13	14	15	16	17	18	19	20	21	22	23	24	TOTAL
7 2	0	1	1	0	0	0	0	0	0	0	0	0	0	0	0	0	0	0	0	0	0	2	0	0	4
7 3	0	0	0	0	0	0	0	0	0	0	2	0	0	0	0	0	0	0	0	0	0	1	1	3	7
7 4	0	1	2	0	0	0	0	0	1	0	1	0	0	0	5	0	1	1	0	0	0	0	1	4	17
7 5	0	0	0	1	0	0	0	0	1	2	0	0	0	0	0	0	0	0	0	1	1	4	1	1	12
7 6	1	0	1	0	0	0	0	0	0	1	0	0	0	0	1	0	0	0	0	3	1	1	2	0	11
7 7	2	1	0	1	0	2	0	0	0	0	0	0	0	2	2	2	0	2	6	44	6	5	12	11	98
7 8	4	1	3	0	3	3	2	11	8	7	49	199	35	120	70	63	135	36	36	19	25	4	6	3	842
7 9	1	1	1	1	1	1	1	1	1	1	1	1	1	1	1	1	1	1	1	1	1	1	1	1	24
7 10	1	1	1	1	1	1	1	1	1	1	1	1	1	1	1	1	1	1	1	1	1	1	1	1	24
7 11	42	42	42	42	42	42	42	42	42	42	42	42	42	42	42	42	115	33	52	52	26	22	9	7	988
7 12	6	2	4	16	36	24	15	12	18	0	58	25	42	59	78	177	202	140	120	133	85	29	21	5	1307
7 13	7	0	3	9	62	29	24	33	25	6	13	38	56	43	76	243	90	64	85	78	59	68	41	11	1163
7 14	5	1	5	4	18	35	12	24	14	5	31	30	38	14	31	96	136	85	143	90	88	26	20	3	954
7 15	5	1	1	7	8	15	7	3	11	19	10	50	78	113	120	97	126	134	129	67	17	14	14	3	1049
7 16	0	1	1	2	7	16	3	9	5	1	17	22	12	19	17	10	14	81	24	71	120	66	25	24	567
7 17	7	2	1	6	32	34	13	12	23	18	19	54	34	49	71	61	49	69	70	50	28	45	15	10	772
7 18	6	5	1	11	31	33	39	36	42	24	70	60	29	99	152	93	109	85	78	97	112	106	61	37	1416
7 19	18	12	6	22	45	57	43	31	49	53	100	74	84	93	48	64	131	182	125	77	70	114	71	24	1593
7 20	8	7	2	6	47	72	40	47	51	119	98	80	122	163	171	198	106	237	165	186	167	43	14	4	2153
7 21	2	1	3	0	10	47	23	40	68	106	184	179	184	123	149	249	199	194	89	52	18	10	5	4	1939
7 22	2	3	1	2	12	29	8	12	33	167	140	139	117	65	74	69	120	186	201	118	35	4	5	5	1547
7 23	1	2	0	5	10	46	27	56	83	100	26	77	157	99	235	128	55	62	69	64	57	19	4	5	1387
7 24	0	0	3	3	6	62	28	78	29	54	92	110	62	192	78	107	145	40	254	78	56	17	3	0	1497
7 25	4	4	2	4	15	25	16	24	50	37	53	58	6	23	24	66	30	39	58	104	98	32	6	4	782
7 26	2	0	0	2	21	26	55	9	18	66	102	12	15	100	50	12	77	61	39	138	58	21	15	5	904
7 27	3	3	6	1	3	71	30	31	75	137	73	37	80	51	50	52	54	18	39	30	50	23	9	7	933
7 28	7	5	1	6	13	8	11	4	27	37	54	60	90	41	57	28	47	46	33	42	17	23	14	6	677
7 29	8	9	8	3	14	12	13	14	15	52	39	25	3	41	22	58	36	32	35	26	13	10	7	10	505
7 30	4	11	2	5	14	19	13	8	7	2	11	16	17	15	40	65	36	26	20	22	22	19	9	7	410
7 31	4	9	8	8	9	20	16	11	18	23	14	15	27	31	17	21	20	17	11	10	7	16	10	3	345
	150	126	109	168	460	729	482	549	715	1080	1300	1404	1332	1599	1682	2003	2035	1872	1883	1654	1238	746	403	208	23927

Appendix Table 38. 1982 south bank of Crescent River side-scan sonar counts by hour.

DATE	HOUR 1	2	3	4	5	6	7	8	9	10	11	12	13	14	15	16	17	18	19	20	21	22	23	24	TOTAL
7 2	1	0	0	1	0	0	0	1	0	0	0	0	0	0	1	1	0	0	1	0	0	0	0	0	6
7 3	8	0	0	1	0	0	0	0	0	0	0	0	0	1	0	0	0	1	0	0	0	0	0	1	12
7 4	1	0	1	4	1	0	0	0	0	0	0	0	1	0	0	0	2	0	0	0	0	0	2	1	13
7 5	0	0	1	1	2	1	0	1	0	0	0	0	2	0	0	0	2	1	1	0	0	1	0	0	13
7 6	0	1	1	0	2	0	0	0	0	0	0	6	0	0	1	1	0	1	0	0	0	1	3	3	20
7 7	4	6	1	1	1	0	2	0	0	0	2	0	1	0	4	0	1	5	1	2	3	0	0	2	36
7 8	6	0	0	0	4	2	0	5	0	2	4	0	4	0	1	0	7	12	7	17	4	6	5	12	98
7 9	11	9	5	10	4	63	54	9	0	4	11	22	53	26	36	36	26	46	48	43	42	15	9	19	601
7 10	12	2	1	6	8	14	3	2	11	14	13	14	33	66	34	46	92	32	48	43	21	25	16	49	605
7 11	1	1	1	1	1	1	1	1	1	1	1	1	1	1	1	1	1	1	1	1	1	1	1	1	24
7 12	1	1	1	1	1	1	1	1	1	1	1	1	1	1	1	1	1	1	1	1	1	1	1	1	24
7 13	1	1	1	1	1	1	1	1	1	1	1	1	1	1	1	1	1	1	1	1	1	1	1	1	24
7 14	14	4	10	2	4	5	9	2	6	0	5	12	9	2	6	13	15	22	158	184	112	37	9	8	648
7 15	4	6	2	1	7	5	0	0	0	3	4	30	22	21	67	89	75	72	100	46	11	2	13	14	594
7 16	15	8	2	2	4	1	0	1	1	0	0	1	3	7	5	2	2	18	85	44	13	14	3	6	237
7 17	8	6	1	2	14	27	10	11	4	17	33	71	31	58	102	130	82	36	62	31	41	42	32	18	869
7 18	13	14	3	0	9	9	15	32	17	28	67	8	23	64	81	154	108	109	75	55	41	52	45	26	1048
7 19	14	8	14	6	12	12	8	8	30	56	79	67	86	73	93	111	38	102	154	93	111	89	60	10	1334
7 20	4	3	3	5	6	32	33	23	31	83	152	171	148	148	670	378	113	161	229	125	146	56	26	5	2751
7 21	10	3	14	5	6	34	26	37	32	170	264	161	182	87	191	386	289	207	153	68	34	19	7	2	2387
7 22	2	5	2	0	11	50	36	23	26	200	80	122	150	70	150	52	138	199	110	81	44	16	9	11	1587
7 23	7	2	0	5	8	66	13	42	86	124	23	39	111	161	268	152	94	93	121	59	82	16	10	4	1586
7 24	9	7	8	7	18	62	26	17	26	15	56	49	163	247	180	44	82	37	78	136	61	26	4	9	1367
7 25	12	5	9	15	15	33	30	15	71	58	63	33	19	20	11	41	40	42	28	145	137	28	4	5	879
7 26	12	17	0	0	2	26	21	60	74	124	55	27	87	172	177	141	47	47	80	75	44	60	8	5	1361
7 27	5	5	7	20	15	66	6	11	45	105	67	127	192	59	37	25	30	14	30	27	58	21	1	5	978
7 28	4	6	9	2	1	6	2	5	4	4	16	10	24	43	39	7	30	50	20	13	3	3	1	12	314
7 29	20	29	8	2	1	7	3	5	2	9	18	29	6	31	36	35	44	37	26	14	2	0	5	8	377
7 30	13	11	2	7	3	0	0	3	7	6	5	0	1	1	10	29	22	17	20	4	1	7	2	9	180
7 31	3	2	3	4	0	0	2	0	0	8	0	0	0	2	2	9	2	8	4	1	9	3	1	8	71
	215	162	110	112	161	524	302	316	476	1033	1020	1002	1354	1362	2205	1885	1384	1372	1642	1309	1023	542	278	255	20044

Appendix Table 39. 1982 north bank of Crescent River side-scan sonar counts by hour, three-day time periods.

DATE	HOUR 1-2	3-4	5-6	7-8	9-10	11-12	13-14	15-16	17-18	19-20	21-22	23-24	TOTAL	CUMULATIVE TOTAL
7 2- 4	2	3	0	0	1	3	0	5	2	0	3	9	28	28
7 5- 7	4	3	2	0	4	0	2	5	2	54	18	27	121	149
7 8-10	9	7	10	17	19	252	159	137	175	59	33	13	890	1039
7 11-13	99	116	235	168	133	218	284	658	644	520	289	94	3458	4497
7 14-16	13	20	99	58	55	160	274	371	576	524	331	89	2570	7067
7 17-19	50	47	232	174	209	377	388	489	625	497	475	218	3781	10848
7 20-22	23	14	217	170	544	820	774	910	1042	811	277	37	5639	16487
7 23-25	11	17	164	229	353	416	539	638	371	627	279	22	3666	20153
7 26-28	20	16	142	140	360	338	377	249	303	321	192	56	2514	22667
7 29-31	45	34	88	75	117	120	134	223	167	124	87	46	1260	23927
	---	---	---	---	---	---	---	---	---	---	---	---	---	
	276	277	1189	1031	1795	2704	2931	3685	3907	3537	1984	611	23927	

Appendix Table 40. 1982 south bank of Crescent River side-scan sonar counts by hour, three-day time periods.

DATE	HOUR 1-2	3-4	5-6	7-8	9-10	11-12	13-14	15-16	17-18	19-20	21-22	23-24	TOTAL	CUMULATIVE TOTAL
7 2- 4	10	7	1	1	0	0	2	2	3	1	0	4	31	31
7 5- 7	11	5	6	3	0	8	3	6	10	4	5	8	69	100
7 8-10	40	22	95	73	31	64	182	153	215	206	113	110	1304	1404
7 11-13	6	6	6	6	6	6	6	6	6	6	6	6	72	1476
7 14-16	51	19	26	12	10	52	64	182	204	617	189	53	1479	2955
7 17-19	63	26	83	84	152	325	335	671	475	470	376	191	3251	6206
7 20-22	27	29	139	178	542	950	785	1827	1107	766	315	60	6725	12931
7 23-25	42	44	202	143	380	263	721	696	388	567	350	36	3832	16763
7 26-28	49	38	116	105	356	302	577	426	218	245	189	32	2653	19416
7 29-31	78	26	11	13	32	52	41	121	130	69	22	33	628	20044
	377	222	685	618	1509	2022	2716	4090	2756	2951	1565	533	20044	

Appendix Table 41. Total number of fish targets and estimated species composition recorded by north bank side-scan sonar in the Crescent River, 1 July through 31 July 1982[1].

Date	Fish Targets	Estimated Species Composition[2] (Number of Fish) Sockeye	Cum	Pink	Cum
7/01	0	0	0	0	0
7/02	5	5	5	0	0
7/03	8	8	13	0	0
7/04	19	19	32	0	0
7/05	14	14	46	0	0
7/06	11	11	57	0	0
7/07	103	103	160	0	0
7/08	840	840	1,000	0	0
7/09	1,370	1,370	2,370	0	0
7/10	1,284	1,284	3,654	0	0
7/11	948	948	4,602	0	0
7/12	1,307	1,302	5,904	5	5
7/13	1,152	1,148	7,052	4	9
7/14	955	952	8,004	3	12
7/15	1,049	1,045	9,049	4	16
7/16	567	565	9,614	2	18
7/17	772	769	10,383	3	21
7/18	1,409	1,404	11,787	5	26
7/19	1,590	1,584	13,371	6	32
7/20	2,154	2,146	15,517	8	40
7/21	1,939	1,932	17,449	7	47
7/22	1,547	1,541	18,990	6	53
7/23	1,387	1,382	20,372	5	58
7/24	1,497	1,497	21,869	0	58
7/25	782	782	22,651	0	58
7/26	904	904	23,555	0	58
7/27	936	936	24,491	0	58
7/28	677	677	25,168	0	58
7/29	505	505	25,673	0	58
7/30	410	410	26,083	0	58
7/31	345	345	26,428	0	58
Total	26,486	26,428		58	

[1] Round-off error estimated (worst case) +/- 1 fish per day.

[2] Based on relative abundance in fishwheel catch.

Appendix Table 42. Total number of fish targets and estimated species composition recorded by south bank side-scan sonar in the Crescent River, 1 July through 31 July 1982[1].

Date	Fish Targets	Estimated Species Composition[2] (Number of Fish) Sockeye	Cum	Pink	Cum
7/01	14	14	14	0	0
7/02	6	6	20	0	0
7/03	12	12	32	0	0
7/04	13	13	45	0	0
7/05	13	13	58	0	0
7/06	22	22	80	0	0
7/07	36	36	116	0	0
7/08	97	97	213	0	0
7/09	788	788	1,001	0	0
7/10	1,148	1,148	2,149	0	0
7/11	728	728	2,877	0	0
7/12	449	447	3,324	2	2
7/13	820	817	4,141	3	5
7/14	648	646	4,787	2	7
7/15	594	592	5,379	2	9
7/16	237	236	5,615	1	10
7/17	869	866	6,481	3	13
7/18	1,048	1,044	7,525	4	17
7/19	1,334	1,329	8,854	5	22
7/20	2,752	2,742	11,596	10	32
7/21	2,387	2,378	13,974	9	41
7/22	1,587	1,581	15,555	6	47
7/23	1,586	1,580	17,135	6	53
7/24	1,367	1,367	18,502	0	53
7/25	879	879	19,381	0	53
7/26	1,362	1,362	20,743	0	53
7/27	978	978	21,721	0	53
7/28	314	314	22,035	0	53
7/29	377	377	22,412	0	53
7/30	180	180	22,592	0	53
7/31	71	71	22,663	0	53
Total	22,716	22,663		53	

[1] Round-off error estimated (worst case) +/- 1 fish per day.

[2] Based on relative abundance in fishwheel catch.

Appendix Table 43. Daily fishwheel and seine catch by species from the Crescent River, 1 July through 31 July 1982[1] [2].

Date	Sockeye	Pink
7/01/82	0	0
7/02/82	0	0
7/03/82	0	0
7/04/82	0	0
7/05/82	0	0
7/06/82	0	0
7/07/82	0	0
7/08/82	0	0
7/09/82	0	0
7/10/82	0	0
7/11/82	0	0
7/12/82	8	0
7/13/82	4	0
7/14/82	4	0
7/15/82	10	0
7/16/82	13	0
7/17/82	15	0
7/18/82	6	0
7/19/82	9	0
7/20/82	14	0
7/21/82	10	0
7/22/82	38	0
7/23/82	147	1
7/24/82	101	0
7/25/82	106	0
7/26/82	13	0
7/27/82	69	0
7/28/82	86	0
7/29/82	86	0
7/30/82	0	0
7/31/82	0	0
Total	743	1

[1] Fishwheel catch adjusted for 24 hours: $\frac{\text{daily catch x 24 hours}}{\text{hours open}}$

[2] Method of capture: fishwheel (1 July - 21 July); beach seine (22 July - 31 July).

Appendix Table 44. Length composition of the major age classes of sockeye salmon collected in the Crescent River, 1979-1982.

Age Class-	Year	Male			Female			Total			Ratio
		Average Length (mm)	Standard Deviation	Sample Size	Average Length (mm)	Standard Deviation	Sample Size	Average Length (mm)	Standard Deviation	Sample Size	Male:Female
4_2	1982	522	8.6 [2]	59	491	8.6 [2]	33	511	8.6 [2]	92	1.8:1
	1981	472	43	47	471	40	31	472	--	78	1.5:1
	1980	459	51	17	494	27	4	466	--	21	4.3:1
	1979	509	59	92	523	42	86	516	52	178	1.1:1
5_2	1982	586	1.4 [2]	303	556	1.4 [2]	259	572	1.4 [2]	562	1.2:1
	1981	576	28	121	555	34	172	564	--	293	0.7:1
	1980	568	27	167	549	22	223	557	--	390	0.7:1
	1979	585	41	184	572	20	274	578	31	458	0.7:1
5_3	1981	487	55	40	519	34	57	506	--	97	0.7:1
	1980	497	30	9	493	19	9	495	--	18	1.0:1
6_3	1982	592	4.3 [2]	22	555	3.3 [2]	28	571	3.8 [2]	50	0.8:1
	1981	584	25	158	554	24	237	566	--	395	0.7:1
	1980	556	43	30	546	19	36	551	--	66	0.8:1

[1] Lengths measured from mid-eye to fork-of-tail.

[2] Standard error.

Appendix Table 45. Weight composition of the major age classes of sockeye salmon collected in the Crescent River, 1980-1982.

Age Class-	Year	Male			Female			Total		
		Average Weight (kg)	Standard Deviation	Sample Size	Average Weight (kg)	Standard Deviation	Sample Size	Average Weight (kg)	Standard Deviation	Sample Size
4_2	1982	2.7	0.15 [1]	59	2.0	0.11 [1]	33	2.5	0.13 [1]	92
	1981	2.0	0.7	47	1.8	0.5	31	2.0	--	78
5_2	1982	3.7	0.03 [1]	303	2.9	0.02 [1]	258	3.3	0.03 [1]	561
	1981	3.5	0.5	121	2.9	0.5	172	3.2	--	293
	1980	3.1	0.5	59	2.7	0.4	91	2.9	--	150
5_3	1981	2.4	0.8	40	2.5	0.5	57	2.4	--	97
6_3	1982	3.9	0.12 [1]	22	2.9	0.06 [1]	28	3.3	0.09 [1]	50
	1981	3.7	0.5	158	2.9	0.4	237	3.2	--	395
	1980	3.1	0.8	27	2.6	0.3	32	2.9	--	59

[1] Standard error.

Appendix Table 46. Total number of fish targets and estimated species composition recorded by west bank side-scan sonar in the Susitna River, 1 July through 5 September 1982[1].

Date	Fish Targets	Estimated Species Composition[2] (Number of Fish)									
		Sockeye	Cumulative	Pink	Cumulative	Chum	Cumulative	Coho	Cumulative	Chinook	Cumulative
7/01	60	42	42	9	9	3	3	5	5	1	1
7/02	83	59	101	13	22	4	7	6	11	2	3
7/03	70	50	151	11	33	3	10	5	16	1	4
7/04	63	45	196	10	43	3	13	5	21	1	5
7/05	106	75	271	17	60	5	18	8	29	2	7
7/06	64	45	316	10	70	3	21	5	34	1	8
7/07	123	87	403	19	89	5	26	9	43	2	10
7/08	131	93	496	20	109	6	32	10	53	2	12
7/09	131	93	589	20	129	6	38	10	63	2	14
7/10	144	102	691	22	151	6	44	11	74	3	17
7/11	56	40	731	9	160	2	46	4	78	1	18
7/12	65	46	777	10	170	3	49	5	83	1	19
7/13	42	30	807	7	177	2	51	3	86	1	20
7/14	88	62	869	14	191	4	55	7	93	2	22
7/15	53	38	907	8	199	2	57	4	97	1	23
7/16	157	111	1,018	24	223	7	64	12	109	3	26
7/17	845	598	1,616	132	355	36	100	64	173	16	42
7/18	3,623	2,563	4,179	564	919	154	254	273	446	68	110
7/19	14,363	12,317	16,496	481	1,400	1,083	1,337	481	927	0	110
7/20	14,034	12,046	28,542	409	1,809	0	1,337	1,579	2,506	0	110
7/21	14,027	12,377	40,919	1,210	3,019	55	1,392	385	2,891	0	110
7/22	14,175	14,094	55,013	0	3,019	0	1,392	81	2,972	0	110
7/23	12,696	6,496	61,509	6,082	9,101	59	1,451	59	3,031	0	110
7/24	5,623	1,997	63,506	2,732	11,833	463	1,914	431	3,462	0	110
7/25	0	0	63,506	0	11,833	0	1,914	0	3,462	0	110
7/26	0	0	63,506	0	11,833	0	1,914	0	3,462	0	110
7/27	0	0	63,506	0	11,833	0	1,914	0	3,462	0	110
7/28	0	0	63,506	0	11,833	0	1,914	0	3,462	0	110
7/29	0	0	63,506	0	11,833	0	1,914	0	3,462	0	110
7/30	0	0	63,506	0	11,833	0	1,914	0	3,462	0	110
7/31	0	0	63,506	0	11,833	0	1,914	0	3,462	0	110
8/01	0	0	63,506	0	11,833	0	1,914	0	3,462	0	110
8/02	0	0	63,506	0	11,833	0	1,914	0	3,462	0	110
8/03	0	0	63,506	0	11,833	0	1,914	0	3,462	0	110
8/04	0	0	63,506	0	11,833	0	1,914	0	3,462	0	110
8/05	629	126	63,632	224	12,057	83	1,997	197	3,659	0	110
8/06	678	93	63,725	280	12,337	89	2,086	216	3,875	0	110
8/07	404	56	63,781	167	12,504	53	2,139	129	4,004	0	110
8/08	368	56	63,837	264	12,768	17	2,156	29	4,033	2	112
8/09	90	14	63,851	65	12,833	4	2,160	7	4,040	1	113
8/10	169	45	63,896	67	12,900	13	2,173	44	4,084	0	113
8/11	148	40	63,936	59	12,959	11	2,184	39	4,123	0	113
8/12	258	69	64,005	102	13,061	19	2,203	67	4,190	0	113
8/13	267	71	64,076	106	13,167	20	2,223	69	4,259	0	113
8/14	232	62	64,138	92	13,259	17	2,240	60	4,319	0	113
8/15	120	32	64,170	48	13,307	9	2,249	31	4,350	0	113

-Continued-

Appendix Table 46. Total number of fish targets and estimated species composition recorded by west bank side-scan sonar in the Susitna River, 1 July through 5 September 1982[1].

		Estimated Species Composition[2] (Number of Fish)									
Date	Fish Targets	Sockeye	Cumulative	Pink	Cumulative	Chum	Cumulative	Coho	Cumulative	Chinook	Cumulative
8/16	75	20	64,190	30	13,337	6	2,255	20	4,370	0	113
8/17	61	16	64,206	24	13,361	5	2,260	16	4,386	0	113
8/18	86	23	64,229	34	13,395	6	2,266	22	4,408	0	113
8/19	90	24	64,253	36	13,431	7	2,273	23	4,431	0	113
8/20	94	25	64,278	37	13,468	7	2,280	24	4,455	0	113
8/21	72	19	64,297	29	13,497	5	2,285	19	4,474	0	113
8/22	105	28	64,325	42	13,539	8	2,293	27	4,501	0	113
8/23	89	24	64,349	35	13,574	7	2,300	23	4,524	0	113
8/24	81	22	64,371	32	13,606	6	2,306	21	4,545	0	113
8/25	80	0	64,371	0	13,606	70	2,376	10	4,555	0	113
8/26	66	0	64,371	0	13,606	58	2,434	8	4,563	0	113
8/27	130	0	64,371	0	13,606	114	2,548	16	4,579	0	113
8/28	97	0	64,371	0	13,606	85	2,633	12	4,591	0	113
8/29	85	0	64,371	0	13,606	74	2,707	11	4,602	0	113
8/30	81	0	64,371	0	13,606	71	2,778	10	4,612	0	113
8/31	83	0	64,371	0	13,606	73	2,851	10	4,622	0	113
9/01	58	0	64,371	0	13,606	51	2,902	7	4,629	0	113
9/02	81	0	64,371	0	13,606	71	2,973	10	4,639	0	113
9/03	65	0	64,371	0	13,606	57	3,030	8	4,647	0	113
9/04	80	0	64,371	0	13,606	70	3,100	10	4,657	0	113
9/05	77	0	64,371	0	13,606	67	3,167	10	4,667	0	113

[1] Round-off error estimated (worst case) +/- fish per day.

[2] Based on relative abundance in fishwheel catch.

Appendix Table 47. Apportioned sonar counts and Peterson population (tag/recapture) estimates by species and sampling location, Adult Anadromous Investigations, Susitna Hydroelectric Studies, 1982[1].

Sampling Location	Escapement Estimates									
	Sockeye		Pink		Chum		Coho		Chinook	
	Sonar	Peterson	Sonar	Peterson	Sonar	Peterson	Sonar	Peterson	Sonar	Peterson
Yentna Station	113,847	--	447,257	--	27,830	--	34,089	--	--	--
Sunshine Station	75,925	151,485	352,014	443,198	178,434	430,442	42,415	45,735	2,924	49,552
Talkeetna Station	3,297	3,123	85,377	73,038	28,823	49,118	7,189	5,111	2,850	10,011
Curry Station	--	1,261	--	58,835	--	29,413	--	2,438	--	10,913

[1] Source: ADF&G 1983.

Appendix Table 48. 1982 west bank of Susitna River side-scan sonar counts by sector.

DATE	SECTOR 1	2	3	4	5	6	7	8	9	10	11	12	TOTAL	CUMULATIVE TOTAL
7 1	41	10	1	0	0	0	0	0	0	6	1	0	59	59
7 2	46	7	3	9	4	2	0	0	0	4	4	7	86	145
7 3	21	14	2	5	5	2	3	5	3	3	3	14	80	225
7 4	52	8	0	0	0	0	1	0	4	4	0	11	80	305
7 5	73	22	5	0	0	0	0	0	0	0	3	4	107	412
7 6	41	14	2	0	0	0	0	0	0	2	2	7	68	480
7 7	87	29	4	2	0	1	0	1	0	0	0	0	124	604
7 8	109	19	0	0	1	0	0	0	1	1	0	0	131	735
7 9	73	32	6	5	5	5	0	0	0	0	2	1	129	864
7 10	41	6	6	7	6	6	1	2	1	1	4	3	84	948
7 11	45	5	0	0	0	0	1	0	0	1	0	2	54	1002
7 12	53	4	1	1	0	0	1	0	0	4	0	1	65	1067
7 13	22	2	3	1	0	0	0	7	3	0	1	2	41	1108
7 14	50	11	1	0	0	0	2	8	4	6	1	5	88	1196
7 15	35	12	0	1	0	0	0	0	0	1	0	4	53	1249
7 16	91	37	2	3	0	0	0	3	7	10	1	3	157	1406
7 17	304	132	53	45	29	29	32	28	43	68	57	32	852	2258
7 18	675	336	220	160	85	85	169	184	231	575	545	351	3616	5874
7 19	5559	2459	1022	505	79	29	228	303	743	1575	1098	763	14363	20237
7 20	5575	1805	1020	403	63	15	177	170	576	1418	1068	718	13008	33245
7 21	7607	2207	1635	533	299	269	118	147	244	355	229	176	13819	47064
7 22	10798	2152	788	230	110	3	53	77	36	39	32	75	14393	61457
7 23	3352	2613	629	141	112	111	121	127	135	241	217	218	8017	69474
7 24	3074	1889	219	49	38	76	4	16	43	36	57	123	5624	75098
7 25	2	2	2	2	2	2	2	2	2	2	2	2	24	75122
7 26	2	2	2	2	2	2	2	2	2	2	2	2	24	75146
7 27	2	2	2	2	2	2	2	2	2	2	2	2	24	75170
7 28	2	2	2	2	2	2	2	2	2	2	2	2	24	75194
7 29	2	2	2	2	2	2	2	2	2	2	2	2	24	75218
7 30	2	2	2	2	2	2	2	2	2	2	2	2	24	75242
7 31	2	2	2	2	2	2	2	2	2	2	2	2	24	75266
8 1	2	2	2	2	2	2	2	2	2	2	2	2	24	75290
8 2	2	2	2	2	2	2	2	2	2	2	2	2	24	75314
8 3	2	2	2	2	2	2	2	2	2	2	2	2	24	75338
8 4	2	2	2	2	2	2	2	2	2	2	2	2	24	75362
8 5	2	2	2	2	2	2	2	2	2	2	2	2	24	75386
8 6	242	122	94	11	5	7	11	6	3	14	20	105	648	76034
8 7	173	111	68	7	4	1	5	2	2	2	7	22	404	76438
8 8	172	78	73	9	3	2	4	4	2	4	5	11	367	76805
8 9	39	47	20	11	11	10	3	1	1	2	2	1	148	76953
8 10	66	31	25	8	10	7	3	3	2	1	7	2	165	77118
8 11	60	36	39	5	1	2	2	1	0	0	1	1	148	77266
8 12	141	58	19	5	0	1	2	1	0	0	1	53	281	77547
8 13	115	44	26	2	3	1	1	4	4	11	32	27	270	77817
8 14	118	51	2	0	0	0	0	2	3	19	16	21	232	78049
8 15	65	13	2	1	0	0	0	0	3	1	8	27	120	78169
8 16	58	12	2	0	0	0	0	0	0	4	2	7	85	78254
8 17	12	10	2	0	0	0	0	0	0	8	12	14	58	78312
8 18	48	26	2	0	0	0	0	0	0	3	5	4	88	78400
8 19	51	16	4	0	0	0	0	0	0	2	6	14	93	78493
8 20	63	24	0	0	0	0	0	0	0	0	0	8	95	78588
8 21	48	15	1	0	0	0	0	0	0	1	1	5	71	78659
8 22	56	35	2	0	0	0	0	0	1	0	3	10	107	78766
8 23	32	30	2	0	0	0	0	0	0	4	5	15	88	78854
8 24	22	23	4	4	4	4	2	2	3	8	2	8	86	78940
8 25	38	33	0	0	0	0	0	0	0	0	1	8	80	79020
8 26	23	29	1	0	0	0	0	0	0	0	0	13	66	79086
8 27	72	39	6	1	1	1	0	0	0	0	3	7	130	79216
8 28	46	39	10	0	0	0	0	0	0	0	0	5	100	79316
8 29	54	22	0	0	0	0	0	0	0	0	1	10	87	79403
8 30	44	28	3	0	0	0	0	0	0	0	3	11	89	79492
8 31	56	33	1	0	0	0	0	0	0	0	0	2	92	79584
9 1	31	19	0	0	0	0	0	0	0	0	0	3	53	79637
9 2	36	27	0	0	0	0	0	0	0	5	1	5	74	79711
9 3	19	24	0	0	0	0	0	0	0	0	4	9	56	79767
9 4	33	27	7	0	0	0	0	0	0	0	0	6	73	79840
9 5	20	35	3	0	0	0	0	0	0	0	1	9	68	79908
	39901	14986	6064	2188	902	693	968	1128	2122	4463	3506	2987	79908	

Appendix Table 49. 1982 east bank of Susitna River side-scan sonar counts by sector.

DATE	SECTOR 1	2	3	4	5	6	7	8	9	10	11	12	TOTAL	CUMULATIVE TOTAL
7 1	34	26	9	4	2	4	6	10	8	19	17	19	158	158
7 2	22	18	21	7	4	6	9	5	13	18	22	20	165	323
7 3	43	12	18	18	14	10	14	20	16	38	26	29	258	581
7 4	40	27	11	15	6	4	8	10	8	15	23	22	189	770
7 5	70	34	19	10	2	3	8	16	5	20	35	36	258	1028
7 6	64	26	9	7	1	0	3	4	13	15	29	39	210	1238
7 7	50	36	11	9	6	2	10	3	4	21	61	37	250	1488
7 8	68	28	18	3	2	1	1	1	10	17	38	58	245	1733
7 9	61	34	22	5	3	1	3	6	3	7	35	56	236	1969
7 10	73	38	19	5	2	2	3	11	5	19	22	17	216	2185
7 11	56	37	33	9	4	2	1	3	6	7	33	13	204	2389
7 12	58	43	15	7	3	2	3	3	8	3	24	7	176	2565
7 13	52	15	19	8	1	1	7	7	7	17	24	51	209	2774
7 14	51	22	1	3	2	1	6	8	5	11	23	10	143	2917
7 15	22	33	16	6	5	1	5	4	11	19	36	36	194	3111
7 16	33	18	34	12	8	4	14	12	13	30	28	31	237	3348
7 17	91	80	61	42	61	43	97	91	91	173	145	209	1184	4532
7 18	122	68	55	79	49	54	75	76	103	151	131	141	1104	5636
7 19	291	413	334	249	270	276	390	403	366	610	602	716	4922	10558
7 20	198	163	184	112	115	127	181	222	201	393	424	695	3015	13573
7 21	456	83	123	56	75	101	131	282	317	923	655	1382	4584	18157
7 22	201	111	97	76	94	82	149	215	239	878	800	1244	4186	22343
7 23	952	389	533	405	325	166	376	454	595	1491	1941	3254	10881	33224
7 24	2895	1646	2115	1507	1057	235	453	358	337	563	993	842	13001	46225
7 25	2499	1881	3071	2815	2672	1190	1405	1733	1734	2617	3087	3616	28320	74545
7 26	9791	7297	7610	3153	1562	141	597	662	418	1451	1246	860	34788	109333
7 27	3786	4437	6923	4490	4332	2078	3919	3830	3393	6082	5057	4349	52676	162009
7 28	2973	3044	5198	4798	4800	2074	5713	7202	6850	13423	12827	14927	83829	245838
7 29	1570	2760	4355	3753	2607	1365	5773	6286	5953	11891	19370	8896	74579	320417
7 30	1511	4384	7322	5858	3470	1199	5095	5853	4319	8953	6667	6034	60665	381082
7 31	5724	8903	9774	6662	3023	779	2334	2804	2524	5703	5234	4990	58454	439536
8 1	1770	4627	5804	3968	1919	697	2093	2975	2291	5659	6137	4797	42737	482273
8 2	1058	2758	3445	2812	1451	692	2759	3065	2416	5157	6689	6702	39004	521277
8 3	781	1660	1996	1803	880	445	1976	2050	1878	3741	4213	3453	24876	546153
8 4	818	1162	1268	861	312	156	703	568	785	1443	1100	1299	10475	556628
8 5	615	511	635	322	153	40	222	229	315	592	477	562	4673	561301
8 6	568	484	419	247	87	43	142	172	205	442	355	479	3643	564944
8 7	488	511	472	216	53	24	172	180	238	414	347	535	3650	568594
8 8	274	290	317	159	46	18	96	133	199	312	235	451	2530	571124
8 9	260	184	127	101	50	13	67	75	84	162	114	135	1372	572496
8 10	279	209	146	77	32	22	47	60	60	186	121	133	1372	573868
8 11	165	112	102	46	32	16	56	55	82	132	153	114	1065	574933
8 12	134	153	101	66	23	17	43	54	54	112	255	165	1177	576110
8 13	149	167	191	62	31	20	37	57	53	112	146	93	1118	577228
8 14	120	97	58	52	28	20	43	60	64	143	96	101	882	578110
8 15	127	115	90	51	23	18	33	43	62	114	65	62	803	578913
8 16	125	118	80	34	21	14	40	42	54	75	34	41	678	579591
8 17	69	51	47	33	23	10	32	52	51	82	55	52	557	580148
8 18	84	68	45	39	19	10	23	45	25	50	41	30	479	580627
8 19	88	53	31	37	15	21	16	41	33	85	34	28	482	581109
8 20	102	67	41	36	33	11	18	34	27	51	42	33	495	581604
8 21	61	53	52	38	26	13	29	31	38	37	40	31	449	582053
8 22	69	48	31	41	26	15	14	14	18	28	31	38	373	582426
8 23	60	43	60	43	32	19	25	37	41	32	59	38	489	582915
8 24	65	43	48	25	17	15	28	21	33	45	53	38	431	583346
8 25	53	24	21	26	18	5	24	26	21	23	42	34	317	583663
8 26	35	33	35	40	25	7	22	16	25	23	33	33	327	583990
8 27	60	41	37	23	19	18	26	26	15	23	25	28	341	584331
8 28	38	50	27	50	30	13	25	17	25	42	42	54	413	584744
8 29	34	45	33	21	22	8	28	20	20	22	23	32	308	585052
8 30	31	31	23	25	12	12	24	22	28	38	51	48	345	585397
8 31	40	32	33	10	11	5	16	36	31	40	27	29	310	585707
9 1	40	31	42	24	13	12	32	34	37	59	32	40	396	586103
9 2	46	37	36	18	30	9	32	18	25	33	44	35	363	586466
9 3	23	19	23	14	21	13	34	21	22	28	30	24	272	586738
9 4	29	31	20	11	8	9	13	28	14	33	39	24	259	586997
9 5	30	27	32	22	12	10	23	34	19	33	37	24	303	587300
	42645	50091	63998	45636	30130	12446	35802	40985	36963	75181	80972	72451	587300	

Appendix Table 50. 1982 west bank of Susitna River side-scan sonar counts by sector, six-day time periods.

DATE	SECTOR 1	2	3	4	5	6	7	8	9	10	11	12	TOTAL	CUMULATIVE TOTAL
7 1- 6	274	75	13	14	9	4	4	5	7	19	13	43	480	480
7 7-12	408	95	17	15	12	12	3	3	2	7	6	7	587	1067
7 13-18	1177	530	279	210	114	114	203	230	288	660	605	397	4807	5874
7 19-24	35965	13125	5313	1861	701	503	701	840	1777	3664	2701	2073	69224	75098
7 25-30	12	12	12	12	12	12	12	12	12	12	12	12	144	75242
7 31- 5	12	12	12	12	12	12	12	12	12	12	12	12	144	75386
8 6-11	752	425	319	51	34	29	28	17	10	23	50	142	1880	77266
8 12-17	509	188	53	8	3	2	3	7	10	43	71	149	1046	78312
8 18-23	298	146	11	0	0	0	0	0	1	10	20	56	542	78854
8 24-29	255	185	21	5	5	5	2	2	3	8	7	51	549	79403
8 30- 4	219	158	11	0	0	0	0	0	0	5	8	36	437	79840
9 5- 5	20	35	3	0	0	0	0	0	0	0	1	9	68	79908
	39901	14986	6064	2188	902	693	968	1128	2122	4463	3506	2987	79908	

Appendix Table 51. 1982 east bank of Susitna River side-scan sonar counts by sector, six-day time periods.

DATE	SECTOR 1	2	3	4	5	6	7	8	9	10	11	12	TOTAL	CUMULATIVE TOTAL
7 1- 6	273	143	87	61	29	27	48	65	63	125	152	165	1238	1238
7 7-12	366	216	118	38	20	10	21	27	36	74	213	188	1327	2565
7 13-18	371	236	186	150	126	104	204	198	230	401	387	478	3071	5636
7 19-24	4993	2805	3386	2405	1936	989	1680	1934	2055	4858	5415	8133	40589	46225
7 25-30	22130	23803	34479	24867	19443	8047	22502	25566	22667	44417	48254	38682	334857	381082
7 31- 5	10766	19621	22922	16428	7738	2809	10087	11691	10209	22295	23850	21803	180219	561301
8 6-11	2034	1790	1583	846	300	136	580	675	868	1648	1325	1847	13632	574933
8 12-17	724	701	567	298	149	99	228	308	338	638	651	514	5215	580148
8 18-23	464	332	260	234	151	89	125	202	182	283	247	198	2767	582915
8 24-29	285	236	201	185	131	66	153	126	139	178	218	219	2137	585052
8 30- 4	209	181	177	102	95	60	151	159	157	231	223	200	1945	586997
9 5- 5	30	27	32	22	12	10	23	34	19	33	37	24	303	587300
	42645	50091	63998	45636	30130	12446	35802	40985	36963	75181	80972	72451	587300	

Appendix Table 52. 1982 west bank of Susitna River side-scan sonar counts by hour.

DATE	HOUR 1	2	3	4	5	6	7	8	9	10	11	12	13	14	15	16	17	18	19	20	21	22	23	24	TOTAL
7 1	0	1	0	4	5	4	4	3	6	3	0	2	1	0	2	4	2	3	3	1	4	4	1	2	59
7 2	2	2	7	1	9	2	0	1	0	7	1	2	4	18	2	0	4	5	8	2	1	2	5	1	86
7 3	2	1	3	5	4	1	5	5	5	5	5	5	1	3	2	2	2	2	4	2	0	4	5	7	80
7 4	1	2	7	5	10	0	4	4	1	4	9	2	0	1	0	0	8	6	3	0	4	0	6	3	86
7 5	4	5	3	3	4	1	1	5	3	9	8	4	5	2	1	8	8	1	6	7	3	8	1	7	107
7 6	0	2	0	8	5	2	7	5	4	8	4	2	0	0	1	1	5	2	2	1	3	0	6	0	68
7 7	7	2	1	5	7	5	5	4	5	9	5	7	2	7	11	7	4	2	5	9	8	1	4	2	124
7 8	4	3	11	5	7	6	0	4	1	5	1	2	6	13	10	1	4	5	3	6	14	10	5	5	131
7 9	4	15	2	11	8	10	12	8	4	4	5	5	2	3	4	3	5	0	1	3	5	5	5	5	129
7 10	6	6	6	6	6	6	6	3	5	3	8	3	2	1	1	4	2	3	0	0	2	2	0	3	84
7 11	2	0	1	0	2	3	2	2	2	3	3	2	1	1	2	2	2	0	1	5	3	1	9	5	54
7 12	4	5	8	5	5	1	3	5	5	0	0	1	3	2	0	2	2	2	1	0	0	3	4	4	65
7 13	2	1	2	2	1	2	3	2	1	1	5	6	2	3	1	0	0	0	1	1	0	2	0	3	41
7 14	6	8	0	1	3	13	3	4	1	0	4	0	4	4	4	4	3	7	8	1	5	1	1	3	88
7 15	1	1	0	1	2	0	1	0	5	5	0	1	7	5	1	3	3	7	1	3	2	0	0	4	53
7 16	4	0	5	7	1	2	4	0	3	4	6	19	10	9	4	7	3	6	9	10	9	11	12	12	157
7 17	26	26	29	26	36	46	23	28	15	38	23	42	43	48	42	57	52	36	36	36	36	36	36	36	852
7 18	150	150	150	150	150	150	150	64	76	61	79	99	53	62	69	117	115	141	152	230	268	323	270	387	3616
7 19	431	501	595	699	746	751	667	460	572	695	350	429	513	323	560	523	620	772	678	715	790	767	659	547	14363
7 20	463	696	628	553	602	672	451	388	474	496	488	407	540	315	441	473	478	475	733	607	683	684	667	594	13008
7 21	612	802	763	654	568	535	507	468	848	848	848	429	429	391	404	426	524	387	411	441	574	575	663	712	13819
7 22	766	1201	957	723	892	830	1343	646	551	549	538	511	539	366	295	528	565	596	279	299	224	264	526	405	14393
7 23	208	288	326	159	64	64	79	78	63	80	98	284	134	660	660	641	430	563	518	567	553	617	433	450	8017
7 24	473	363	336	364	368	364	251	221	229	210	197	191	340	203	155	244	76	146	142	131	137	189	140	154	5624
7 25	1	1	1	1	1	1	1	1	1	1	1	1	1	1	1	1	1	1	1	1	1	1	1	1	24
7 26	1	1	1	1	1	1	1	1	1	1	1	1	1	1	1	1	1	1	1	1	1	1	1	1	24
7 27	1	1	1	1	1	1	1	1	1	1	1	1	1	1	1	1	1	1	1	1	1	1	1	1	24
7 28	1	1	1	1	1	1	1	1	1	1	1	1	1	1	1	1	1	1	1	1	1	1	1	1	24
7 29	1	1	1	1	1	1	1	1	1	1	1	1	1	1	1	1	1	1	1	1	1	1	1	1	24
7 30	1	1	1	1	1	1	1	1	1	1	1	1	1	1	1	1	1	1	1	1	1	1	1	1	24
7 31	1	1	1	1	1	1	1	1	1	1	1	1	1	1	1	1	1	1	1	1	1	1	1	1	24
8 1	1	1	1	1	1	1	1	1	1	1	1	1	1	1	1	1	1	1	1	1	1	1	1	1	24
8 2	1	1	1	1	1	1	1	1	1	1	1	1	1	1	1	1	1	1	1	1	1	1	1	1	24
8 3	1	1	1	1	1	1	1	1	1	1	1	1	1	1	1	1	1	1	1	1	1	1	1	1	24
8 4	1	1	1	1	1	1	1	1	1	1	1	1	1	1	1	1	1	1	1	1	1	1	1	1	24
8 5	1	1	1	1	1	1	1	1	1	1	1	1	1	1	1	1	1	1	1	1	1	1	1	1	24
8 6	31	17	24	21	27	18	21	34	43	64	27	29	28	29	33	18	47	19	20	23	19	26	17	13	648
8 7	16	13	21	18	9	15	21	19	29	13	12	9	12	14	8	10	33	13	28	28	26	9	10	18	404
8 8	19	7	16	15	8	16	13	18	21	13	35	11	36	29	8	25	8	7	8	16	9	6	10	13	367
8 9	17	7	23	10	8	4	11	4	4	4	4	4	4	4	4	4	4	4	4	4	4	4	4	4	148
8 10	7	7	7	7	7	7	7	9	5	6	2	5	5	13	11	11	10	3	4	15	2	1	5	9	165
8 11	4	8	5	5	3	8	7	6	9	2	8	3	18	10	4	1	8	3	19	2	5	6	2	2	148
8 12	5	1	3	18	4	17	22	17	15	19	24	7	1	21	10	2	12	12	8	14	16	10	18	5	281
8 13	12	11	11	3	4	6	15	18	11	15	27	11	1	10	8	15	11	16	11	13	1	19	10	11	270
8 14	10	6	11	22	10	3	5	24	15	4	11	8	5	6	23	0	13	2	13	10	9	4	15	3	232
8 15	6	13	11	0	5	6	2	9	9	2	9	3	1	4	1	2	8	1	2	5	5	0	7	9	120
8 16	2	4	4	1	4	0	9	2	4	3	3	7	0	4	7	0	9	0	7	3	0	2	2	8	85
8 17	2	2	1	0	3	8	4	0	1	12	2	0	3	1	8	1	2	0	0	1	1	3	3	0	58
8 18	4	5	1	9	4	3	6	5	2	5	0	1	4	4	8	2	0	2	3	3	1	5	5	6	88
8 19	5	4	5	1	4	4	0	1	3	11	1	5	2	2	4	4	3	5	2	5	1	18	3	0	93
8 20	2	2	3	5	4	9	4	6	3	3	1	0	1	2	5	6	1	1	2	7	10	6	1	11	95
8 21	5	3	1	0	6	0	11	4	3	4	0	1	0	2	2	0	0	8	1	7	3	5	4	1	71
8 22	2	8	7	5	1	2	10	2	5	1	7	6	3	4	1	4	3	10	7	7	4	3	2	3	107
8 23	5	13	4	1	5	1	4	5	4	5	2	6	5	1	1	2	0	2	0	0	6	7	5	4	88
8 24	4	4	4	4	4	4	4	4	4	4	1	2	2	8	3	4	2	1	6	0	7	7	1	2	86
8 25	4	15	4	3	0	10	3	5	0	0	0	8	7	1	2	1	3	5	1	3	0	4	0	1	80
8 26	3	3	4	0	2	2	0	4	4	3	4	6	0	2	11	5	0	0	2	1	3	7	0	0	66
8 27	4	10	4	7	2	7	3	8	1	4	5	11	12	12	6	8	5	3	1	3	2	1	6	5	130
8 28	3	8	2	3	8	2	0	9	1	4	8	2	1	11	1	6	1	1	1	9	8	2	2	7	100
8 29	0	6	1	0	6	7	2	3	0	7	8	5	4	2	1	1	5	7	4	1	5	1	5	6	87
8 30	6	4	1	6	6	4	3	2	7	5	6	7	5	1	2	1	3	1	1	5	4	3	1	5	89
8 31	2	2	2	3	4	6	8	4	5	5	7	13	8	2	4	1	1	5	2	1	1	1	1	4	92
9 1	0	0	0	0	0	0	0	6	0	2	1	6	5	0	1	9	5	0	3	1	5	4	3	2	53
9 2	5	1	3	2	6	4	0	3	3	5	2	3	0	1	0	2	2	1	10	3	3	7	4	4	74
9 3	6	3	3	1	2	0	1	1	1	0	7	1	2	2	3	4	6	0	2	3	0	4	3	1	56
9 4	5	2	1	2	2	0	0	0	8	3	0	3	9	13	2	3	0	0	6	0	6	2	0	6	73
9 5	0	5	0	0	7	2	9	1	1	5	0	6	4	2	5	1	0	3	0	0	4	8	5	0	68
	3386	4287	4039	3581	3682	3657	3748	2653	3112	3292	2921	2656	2841	2669	2871	3222	3134	3314	3195	3282	3510	3706	3624	3526	79908

Appendix Table 53. 1982 east bank of Susitna River side-scan sonar counts by hour.

DATE	HOUR 1	2	3	4	5	6	7	8	9	10	11	12	13	14	15	16	17	18	19	20	21	22	23	24	TOTAL
7 1	3	8	2	8	3	3	3	0	8	13	7	14	3	5	12	4	5	14	9	4	13	11	2	4	158
7 2	7	11	5	5	5	8	10	6	4	5	3	7	6	4	4	10	14	5	8	10	5	4	12	5	145
7 3	11	18	3	10	18	2	12	12	12	12	12	12	12	18	11	23	7	8	11	7	2	10	12	3	258
7 4	9	6	8	9	9	9	2	12	12	12	2	9	15	4	8	5	1	7	5	3	12	11	7	12	189
7 5	0	10	14	16	16	13	14	16	10	20	7	12	11	7	3	26	16	9	10	4	2	7	1	14	258
7 6	1	16	18	0	11	5	5	7	1	16	14	8	10	15	6	22	5	14	4	5	6	7	2	12	210
7 7	6	16	8	9	5	9	6	10	5	6	19	12	10	10	14	8	7	7	4	13	11	13	29	13	250
7 8	20	6	11	4	10	11	8	7	6	15	9	9	11	20	4	22	25	6	7	2	2	4	12	14	245
7 9	10	18	17	17	6	19	9	6	6	10	1	6	11	9	14	8	5	16	8	5	10	10	10	5	236
7 10	4	15	7	3	17	19	11	9	9	9	5	10	9	19	14	16	5	6	0	2	11	7	9	0	216
7 11	4	6	7	0	11	3	15	10	5	11	6	17	10	19	18	8	5	6	5	3	8	10	5	12	204
7 12	2	1	6	4	7	1	2	11	8	7	17	6	11	9	6	9	15	10	5	22	5	4	6	2	176
7 13	9	5	5	2	5	3	8	22	14	21	2	9	10	6	9	3	9	2	26	7	9	2	9	12	209
7 14	8	4	4	1	7	10	8	2	2	7	4	18	6	7	7	3	6	7	7	7	9	6	2	1	143
7 15	2	15	21	4	3	6	11	9	18	6	4	2	1	15	1	7	9	1	28	8	5	0	5	13	194
7 16	5	4	6	2	11	2	6	5	1	0	0	7	10	4	14	12	12	4	17	22	19	20	28	26	237
7 17	19	41	41	41	44	46	52	41	55	38	41	44	61	43	66	69	68	58	52	56	75	25	59	49	1184
7 18	92	102	62	47	46	30	52	27	20	27	30	39	13	30	46	45	71	49	46	46	46	46	46	46	1104
7 19	210	205	205	205	205	205	205	305	255	208	167	182	225	300	206	191	117	111	174	161	259	201	216	204	4922
7 20	208	169	201	231	190	181	185	84	72	71	70	72	49	50	125	125	125	128	105	114	108	77	117	158	3015
7 21	110	145	170	160	163	270	219	243	250	181	170	165	119	148	93	131	182	253	193	338	249	214	259	159	4584
7 22	200	126	139	204	157	210	166	201	174	98	79	122	91	82	124	195	191	225	229	256	221	255	226	215	4186
7 23	219	282	319	366	423	516	483	418	492	393	537	440	391	642	468	368	517	599	591	316	587	510	390	614	10881
7 24	502	580	650	565	409	468	593	380	253	347	141	416	398	401	503	568	658	712	812	683	730	750	624	858	13001
7 25	850	849	981	1071	1038	1120	1168	399	1150	1227	1474	1049	1010	1050	1057	1058	1126	1219	1782	1914	1453	1543	1622	1110	28320
7 26	1651	1258	1313	1170	1086	958	1248	1343	2020	1610	1441	1428	1337	1589	1746	1489	1695	1835	1467	1347	1397	1446	1537	1377	34788
7 27	2378	1965	2326	1592	1633	1782	1952	1886	2131	1825	1948	1861	2215	2619	2422	1976	2252	2167	2487	2368	2525	3074	2269	3023	52676
7 28	4067	3942	3803	4912	5071	4633	4667	4558	4438	4347	3750	3022	3723	3110	3292	3220	2945	1656	2451	2508	2333	2581	2377	2423	83829
7 29	2893	2536	2638	3500	3683	4596	3492	3412	4033	4369	3369	2482	2770	2466	2643	2666	2573	2700	2831	2968	2685	2961	2955	3358	74579
7 30	3471	3629	3629	3520	3713	3290	2877	2712	3142	2866	2314	2118	2221	1865	1963	1805	1896	1986	1789	2170	2190	1819	1615	2065	60665
7 31	1965	1854	1980	2352	2343	2288	2514	2692	4113	2863	2433	1974	2145	2616	2120	2128	2098	2221	2815	2526	2555	2618	2883	2358	58454
8 1	2206	2263	2407	2069	2166	2289	2203	2107	2600	1424	1440	1570	1256	1844	1782	2188	1503	1485	1484	1264	1184	1181	1325	1497	42737
8 2	1938	1725	2010	2177	2144	2428	2254	2062	1989	1907	1343	1531	1598	1603	1012	1408	910	1109	1169	1207	1242	1121	1389	1738	39006
8 3	1606	1542	1699	1564	1493	1575	1222	1526	1406	714	1080	929	566	595	872	779	742	717	716	786	646	713	671	717	24876
8 4	668	671	632	584	452	511	544	521	406	554	493	479	373	288	308	313	258	285	310	387	408	325	334	371	10475
8 5	315	338	237	243	271	257	280	199	222	188	130	121	121	192	176	141	148	141	170	154	148	169	151	161	4673
8 6	181	173	129	132	153	154	192	192	146	181	149	107	79	149	136	115	138	142	210	166	152	155	185	127	3643
8 7	163	183	139	177	162	116	124	207	104	156	104	136	125	130	128	194	204	172	183	167	151	139	178	108	3650
8 8	106	138	160	143	69	130	121	126	117	87	104	119	90	115	89	122	111	106	109	66	86	73	58	85	2530
8 9	68	58	57	67	46	60	72	85	42	38	72	33	37	64	51	78	41	61	44	93	47	53	57	48	1372
8 10	40	63	67	96	21	39	78	72	46	63	55	67	64	67	39	70	74	41	62	40	43	44	82	39	1372
8 11	36	42	42	42	30	43	64	65	44	57	44	27	21	57	54	29	19	46	59	30	34	65	58	57	1065
8 12	53	43	40	69	35	39	9	63	51	57	60	46	47	41	54	53	43	51	52	51	49	59	65	47	1177
8 13	46	72	60	61	148	48	56	51	44	33	18	37	33	28	26	38	28	39	33	50	45	48	39	37	1118
8 14	49	34	19	47	33	41	32	47	25	45	46	39	50	30	31	43	44	25	33	34	42	26	28	39	882
8 15	42	48	44	40	29	31	26	21	25	40	29	20	40	24	38	36	27	21	32	35	43	40	30	42	803
8 16	34	31	20	24	18	15	23	31	25	14	42	31	23	30	24	30	32	21	25	39	34	33	56	23	678
8 17	31	31	19	34	37	28	23	43	34	28	34	34	15	16	14	10	6	11	20	16	25	12	19	17	557
8 18	25	23	14	33	17	26	20	18	18	29	15	7	16	16	15	30	16	14	18	19	25	29	20	16	479
8 19	28	16	35	16	18	17	11	26	27	20	9	16	26	14	28	10	4	20	17	11	14	44	25	30	482
8 20	27	21	24	15	15	16	25	23	19	21	16	16	19	29	17	11	15	16	23	38	13	28	33	15	495
8 21	21	21	12	26	17	31	19	19	12	23	16	18	15	8	25	11	12	33	21	19	24	21	9	16	449
8 22	10	14	14	21	13	18	22	16	13	15	18	8	13	11	24	16	13	20	15	10	12	17	19	21	373
8 23	20	12	25	17	21	17	18	22	23	35	13	25	17	14	25	22	21	10	23	27	21	17	16	28	489
8 24	11	20	12	13	18	19	21	22	31	16	22	44	27	12	25	21	4	11	14	15	8	19	14	12	431
8 25	18	18	13	13	8	12	14	7	8	12	16	16	7	8	17	20	33	8	9	16	7	17	4	16	317
8 26	20	18	21	25	22	11	9	20	12	11	8	2	5	7	10	16	3	11	20	10	14	13	20	19	327
8 27	19	15	11	19	16	17	22	11	10	16	14	15	19	13	13	3	10	14	14	14	14	14	14	14	341
8 28	17	17	17	17	7	25	23	18	11	20	27	11	16	21	10	12	17	17	17	16	22	11	14	30	413
8 29	13	13	13	13	13	13	13	9	27	16	4	9	15	14	11	14	11	11	14	10	17	9	16	10	308
8 30	10	12	16	15	25	27	18	14	14	16	12	13	11	19	19	20	1	8	9	13	11	24	7	11	345
8 31	13	16	12	5	6	5	18	9	18	16	16	12	31	7	12	16	12	18	11	13	11	11	12	10	316
9 1	7	18	21	15	16	6	12	12	16	18	15	11	9	22	23	21	25	15	11	19	19	26	14	23	396
9 2	15	12	18	16	16	12	23	7	14	10	12	14	21	9	13	24	12	16	23	17	20	14	13	12	363
9 3	15	15	7	9	8	11	9	10	12	18	11	13	8	14	19	7	12	12	5	11	11	10	8	17	272
9 4	7	9	6	8	4	15	10	6	12	13	18	9	12	7	12	11	13	11	12	13	18	11	10	20	259
9 5	14	9	14	9	6	8	20	17	12	17	12	13	10	11	18	5	14	9	16	26	7	7	15	14	303
	268	282	559	626	685	279	042	792	1288	762	765	326	489	303	562	656	823	593	2117	2021	7492	2711	2218	9721	5721
	2123	6207	8822	9812	2279	7222	0122	8846	2235	4236	52														587300

Appendix Table 54. 1982 west bank of Susitna River side-scan sonar counts by hour, six-day time periods.

DATE	HOUR 1-2	3-4	5-6	7-8	9-10	11-12	13-14	15-16	17-18	19-20	21-22	23-24	TOTAL	CUMULATIVE TOTAL
7 1- 6	22	46	47	44	55	44	35	23	48	39	33	44	480	480
7 7-12	58	61	66	54	46	42	43	47	31	34	54	51	587	1067
7 13-18	375	373	406	282	210	284	250	309	373	488	693	764	4807	5874
7 19-24	6804	6757	6456	5559	5615	4770	4753	5350	5632	5521	6057	5950	69224	75098
7 25-30	12	12	12	12	12	12	12	12	12	12	12	12	144	75242
7 31- 5	12	12	12	12	12	12	12	12	12	12	12	12	144	75386
8 6-11	153	172	130	170	213	149	202	137	159	171	117	107	1880	77266
8 12-17	74	85	70	127	110	112	57	77	86	87	70	91	1046	78312
8 18-23	58	42	43	58	49	30	30	39	35	44	69	45	542	78854
8 24-29	64	36	54	45	32	60	62	49	33	32	47	35	549	79403
8 30- 4	36	24	34	28	44	56	48	32	24	37	40	34	437	79840
9 5- 5	5	0	9	10	6	6	6	6	3	0	12	5	68	79908
	7673	7620	7339	6401	6404	5577	5510	6093	6448	6477	7216	7150	79908	

Appendix Table 55. 1982 east bank of Susitna River side-scan sonar counts by hour, six-day time periods.

DATE	HOUR 1-2	3-4	5-6	7-8	9-10	11-12	13-14	15-16	17-18	19-20	21-22	23-24	TOTAL	CUMULATIVE TOTAL
7 1- 6	100	98	102	99	125	107	110	134	105	80	92	86	1238	1238
7 7-12	108	93	118	104	97	117	148	141	113	76	95	117	1327	2565
7 13-18	306	236	213	243	209	200	206	282	296	322	262	296	3071	5636
7 19-24	2956	3415	3397	3482	2794	2561	2896	3097	3818	3972	4161	4040	40589	46225
7 25-30	29489	30455	32603	29714	33158	26256	25975	25337	24050	26082	26007	25731	334857	381082
7 31- 5	17091	17954	18267	18064	18386	13523	13197	13227	11617	12988	12310	13595	180219	561301
8 6-11	1251	1251	1023	1398	1081	1017	998	1105	1155	1229	1042	1082	13632	574933
8 12-17	514	477	502	425	421	436	377	397	348	420	456	442	5215	580148
8 18-23	238	252	226	239	255	177	198	234	194	241	265	248	2767	582915
8 24-29	199	187	181	189	190	188	164	172	150	169	165	183	2137	585052
8 30- 4	149	148	151	148	179	156	170	197	155	157	178	157	1945	586997
9 5- 5	23	23	14	37	29	25	21	23	23	42	14	29	303	587300
	52424	54589	56797	54142	56924	44763	44460	44346	42024	45778	45047	46006	587300	

Appendix Table 56. Daily fishwheel catch by species on the west bank of the Susitna River, 1 July through 5 September 1982[1].

Date	Sockeye	Pink	Chum	Coho	Chinook	Whitefish
7/01/82	0	0	0	0	0	0
7/02/82	0	0	0	0	0	0
7/03/82	0	0	0	0	1	0
7/04/82	1	2	0	0	0	0
7/05/82	0	2	0	0	1	0
7/06/82	0	0	0	0	0	1
7/07/82	0	1	0	0	0	0
7/08/82	0	1	0	0	1	1
7/09/82	0	2	0	0	0	0
7/10/82	1	1	0	0	0	0
7/11/82	0	0	0	0	0	0
7/12/82	0	0	0	0	0	0
7/13/82	2	1	0	1	0	0
7/14/82	6	2	0	1	0	0
7/15/82	2	0	0	1	0	1
7/16/82	9	3	0	2	1	0
7/17/82	53	8	5	3	0	0
7/18/82	76	10	4	8	0	0
7/19/82	307	12	27	12	0	0
7/20/82	206	7	0	27	0	0
7/21/82	225	22	1	7	0	0
7/22/82	173	0	0	1	0	0
7/23/82	110	103	1	1	0	0
7/24/82	125	171	29	27	0	0
7/25/82	128	219	16	0	0	0
7/26/82	74	190	9	11	0	0
7/27/82	89	89	7	7	1	0
7/28/82	104	638	38	18	0	0
7/29/82	86	730	19	83	1	0
7/30/82	48	756	24	48	0	0
7/31/82	101	674	31	53	0	0
8/01/82	50	185	30	32	0	0
8/02/82	39	253	24	43	0	1
8/03/82	66	600	60	99	0	0
8/04/82	35	184	16	77	0	0
8/05/82	32	57	21	50	0	0
8/06/82	14	31	17	34	0	0
8/07/82	8	35	4	17	0	6
8/08/82	16	76	3	3	0	1
8/09/82	7	33	4	9	1	1
8/10/82	7	21	2	7	0	0
8/11/82	5	12	2	3	0	0
8/12/82	5	5	0	1	0	1
8/13/82	5	2	0	9	0	0
8/14/82	0	2	3	5	0	0
8/15/82	1	4	0	2	0	0
8/16/82	3	1	0	1	0	1
8/17/82	1	0	1	2	0	0

-Continued-

Appendix Table 56. Daily fishwheel catch by species on the west bank of the Susitna River, 1 July through 5 September 1982[1] (continued).

Date	Sockeye	Pink	Chum	Coho	Chinook	Whitefish
8/18/82	4	0	0	0	0	0
8/19/82	3	4	0	2	0	0
8/20/82	2	1	1	0	0	3
8/21/82	2	0	0	1	0	0
8/22/82	1	2	0	3	0	0
8/23/82	0	2	1	1	0	0
8/24/82	0	2	1	1	0	0
8/25/82 [2]	0	0	0	0	0	0
8/26/82 [2]	0	0	0	0	0	0
8/27/82 [2]	0	0	0	0	0	0
8/28/82 [2]	0	0	0	0	0	0
8/29/82 [2]	0	0	0	0	0	0
8/30/82 [2]	0	0	0	0	0	0
8/31/82 [2]	0	0	0	0	0	0
9/01/82	0	0	0	0	0	0
9/02/82	0	0	2	0	0	1
9/03/82	0	0	4	1	0	3
9/04/82	0	0	1	0	0	4
9/05/82	0	0	0	0	0	3
Total	2,232	5,156	408	714	7	28

[1] Fishwheel catch adjusted for 24 hours: $\frac{\text{daily catch x 24 hours}}{\text{hours open}}$

[2] Fishwheel closed for repair.

Appendix Table 57. Daily fishwheel catch by species on the east bank of the Susitna River, 1 July through 5 September 1982[1].

Date	Sockeye	Pink	Chum	Coho	Chinook	Whitefish
7/01/82	0	2	1	0	4	0
7/02/82	0	3	0	0	1	0
7/03/82	1	4	0	0	2	0
7/04/82	0	3	0	0	1	0
7/05/82	0	1	0	0	1	0
7/06/82	0	1	0	0	0	0
7/07/82	1	1	0	0	0	0
7/08/82	0	0	0	0	1	1
7/09/82	0	0	0	0	1	0
7/10/82	0	1	0	0	0	0
7/11/82	1	3	0	0	0	0
7/12/82	0	0	0	0	0	0
7/13/82	3	0	0	0	3	0
7/14/82	3	3	0	1	1	0
7/15/82	1	0	0	0	0	0
7/16/82	1	5	0	1	2	1
7/17/82	13	7	0	2	0	0
7/18/82	15	20	7	4	0	0
7/19/82	33	40	25	9	0	0
7/20/82	30	18	12	18	0	0
7/21/82	20	18	5	0	0	0
7/22/82	29	53	5	7	0	0
7/23/82	25	152	3	8	0	0
7/24/82	27	388	15	19	0	0
7/25/82	41	55	14	14	0	0
7/26/82	46	223	12	5	0	0
7/27/82	48	20	3	3	0	0
7/28/82	58	437	15	23	0	0
7/29/82	9	946	7	12	1	0
7/30/82	41	782	27	89	0	0
7/31/82	24	300	28	34	0	0
8/01/82	14	354	12	18	0	9
8/02/82	1	722	22	10	0	6
8/03/82	3	627	26	11	0	1
8/04/82	0	496	12	12	0	0
8/05/82	5	96	14	1	0	0
8/06/82	2	43	2	0	0	0
8/07/82	6	105	18	4	0	0
8/08/82	5	91	5	1	0	0
8/09/82	4	43	3	3	0	1
8/10/82	0	19	6	3	0	0
8/11/82	5	34	1	2	0	0
8/12/82	4	15	3	1	0	3
8/13/82	3	6	2	2	0	0
8/14/82	0	0	0	0	0	0
8/15/82	0	0	0	0	0	0
8/16/82	0	0	0	0	0	0
8/17/82	0	0	0	0	0	0

-Continued-

Appendix Table 57. Daily fishwheel catch by species on the east bank of the Susitna River, 1 July through 5 September 1982[1] (continued).

Date	Sockeye	Pink	Chum	Coho	Chinook	Whitefish
8/18/82	0	0	0	0	0	0
8/19/82	1	4	1	0	0	0
8/20/82	0	2	1	0	0	0
8/21/82	0	6	0	0	0	0
8/22/82	0	1	0	0	0	0
8/23/82	0	2	0	0	0	0
8/24/82	0	0	0	0	0	0
8/25/82	0	1	0	0	0	2
8/26/82	1	0	1	0	0	1
8/27/82	0	0	3	0	0	8
8/28/82	0	0	0	0	0	8
8/29/82	0	0	1	0	0	1
8/30/82	0	0	0	2	0	6
8/31/82	3	0	0	0	0	0
9/01/82	1	0	2	0	0	1
9/02/82	1	1	1	0	0	3
9/03/82	0	3	0	0	0	2
9/04/82	0	0	0	0	0	4
9/05/82	0	0	0	0	0	10
Total	529	6,157	315	319	18	68

[1] Fishwheel catch adjusted for 24 hours : $\frac{\text{daily catch x 24 hours}}{\text{hours open}}$

Appendix Table 58. Length composition of the major age classes of sockeye salmon collected in the Susitna River, 1979-1982.

Age Class-Year		Male			Female			Total			Ratio Male:Female
		Average Length[1] (mm)	Standard Deviation	Sample Size	Average Length (mm)	Standard Deviation	Sample Size	Average Length (mm)	Standard Deviation	Sample Size	
4_2	1982	449	3.8[2]	163	469	7.0[2]	80	456	4.9[2]	249	2.0:1
	1981	466	47	81	482	77	51	472	--	132	1.6:1
	1980	509	43	104	508	32	96	508	--	200	1.1:1
	1979	464	41	312	496	36	170	475	42	482	1.8:1
5_2	1982	584	2.8[2]	314	562	2.2[2]	389	572	2.5[2]	703	0.8:1
	1981	579	54	654	562	40	711	570	--	1,365	0.9:1
	1980	577	33	131	554	29	164	564	--	295	0.8:1
	1979	574	51	78	567	28	170	569	37	248	0.5:1
6_3	1982	571	8.6	47	542	5.38	60	559	6.8	107	0.8:1

[1] Lengths measured from mid-eye to fork-of-tail.

[2] Standard error.

Appendix Table 59. Weight composition of the major age classes of sockeye salmon collected in the Susitna River, 1979-1982.

Age Class-	Year	Male			Female			Total		
		Average Weight (kg)	Standard Deviation	Sample Size	Average Weight (kg)	Standard Deviation	Sample Size	Average Weight (kg)	Standard Deviation	Sample Size
4_2	1982	1.5	0.05 [1]	153	1.6	0.08 [1]	80	1.5	0.06 [1]	233
	1981	1.7	0.7	81	2.0	0.6	51	1.8	--	132
	1980	2.2	0.7	152	2.1	0.8	159	2.1	--	311
	1979	1.7	0.5	311	2.0	0.7	169	1.8	0.6	480
5_2	1982	3.7	0.06 [1]	291	3.0	0.04 [1]	362	3.3	0.05 [1]	653
	1981	3.6	0.6	654	3.0	0.4	711	3.3	--	1,365
	1980	3.3	0.8	82	2.7	0.6	145	2.9	--	227
	1979	3.4	1.0	78	3.1	0.6	170	3.2	0.8	248
6_3	1982	3.5	0.14 [1]	44	2.7	0.10 [1]	58	3.0	0.11 [1]	102

[1] Standard error.

Appendix Table 60. Total number of fish targets and estimated species composition recorded by east bank side-scan sonar in the Susitna River, 1 July through 5 September 1982[1].

		Estimated Species Composition[2] (Number of Fish)									
Date	Fish Targets	Sockeye	Cumulative	Pink	Cumulative	Chum	Cumulative	Coho	Cumulative	Chinook	Cumulative
7/01	156	48	48	63	63	22	22	11	11	11	11
7/02	138	43	91	56	119	20	42	10	21	10	21
7/03	244	75	166	98	217	35	77	18	39	18	39
7/04	171	53	219	69	286	24	101	12	51	12	51
7/05	269	83	302	109	395	38	139	20	71	20	71
7/06	207	64	366	84	479	29	168	15	86	15	86
7/07	245	76	442	99	578	35	203	18	104	18	104
7/08	245	76	518	99	677	35	238	18	122	18	122
7/09	255	79	597	103	780	36	274	19	141	19	141
7/10	215	66	663	87	867	30	304	16	157	16	157
7/11	203	63	726	82	949	29	333	15	172	15	172
7/12	178	55	781	72	1,021	25	358	13	185	13	185
7/13	206	64	845	83	1,104	29	387	15	200	15	200
7/14	140	43	888	56	1,160	20	407	10	210	10	210
7/15	191	59	947	77	1,237	27	434	14	224	14	224
7/16	234	72	1,019	94	1,331	33	467	17	241	17	241
7/17	1,187	367	1,386	479	1,810	168	635	87	328	87	328
7/18	676	209	1,595	273	2,083	96	731	49	377	49	377
7/19	4,917	1,519	3,114	1,984	4,067	696	1,427	359	736	359	736
7/20	3,014	1,107	4,221	1,248	5,315	308	1,735	350	1,086	0	736
7/21	4,584	1,684	5,905	1,898	7,213	469	2,204	533	1,619	0	736
7/22	4,186	1,538	7,443	1,733	8,946	428	2,632	487	2,106	0	736
7/23	14,352	1,909	9,352	11,604	20,550	229	2,861	611	2,717	0	736
7/24	17,201	1,034	10,386	14,864	35,414	575	3,436	728	3,445	0	736
7/25	28,319	6,009	16,395	19,202	54,616	1,796	5,232	1,312	4,757	0	736
7/26	34,791	7,382	23,777	23,590	78,206	2,206	7,438	1,612	6,369	0	736
7/27	53,138	9,279	33,056	40,007	118,213	1,576	9,014	2,276	8,645	0	736
7/28	83,829	14,639	47,695	63,113	181,326	2,486	11,500	3,591	12,236	0	736
7/29	74,579	688	48,383	72,361	253,687	535	12,035	918	13,154	76	812
7/30	60,655	2,649	51,032	50,522	304,209	1,744	13,779	5,750	18,904	0	812
7/31	58,067	3,610	54,642	45,130	349,339	4,212	17,991	5,115	24,019	0	812
8/01	42,734	1,503	56,145	38,010	387,349	1,288	19,279	1,933	25,952	0	812
8/02	39,003	52	56,197	37,298	424,647	1,137	20,416	517	26,469	0	812
8/03	24,874	112	56,309	23,382	448,029	970	21,386	410	26,879	0	812
8/04	10,475	0	56,309	9,992	458,021	242	21,628	242	27,121	0	812
8/05	4,675	201	56,510	3,987	462,008	459	22,087	29	27,150	0	812
8/06	3,642	156	56,666	3,106	465,114	357	22,444	22	27,172	0	812
8/07	3,521	165	56,831	2,937	468,051	345	22,789	75	27,247	0	812
8/08	2,526	118	56,949	2,107	470,158	247	23,036	54	27,301	0	812
8/09	1,372	122	57,071	1,043	471,201	122	23,158	85	27,386	0	812
8/10	1,373	122	57,193	1,044	472,245	122	23,280	85	27,471	0	812
8/11	1,075	96	57,289	817	473,062	96	23,376	66	27,537	0	812
8/12	1,180	105	57,394	897	473,959	105	23,481	73	27,610	0	812
8/13	1,105	213	57,607	553	474,512	255	23,736	85	27,695	0	812
8/14	892	172	57,779	446	474,958	206	23,942	69	27,764	0	812
8/15	803	154	57,933	402	475,360	185	24,127	62	27,826	0	812

-Continued-

Appendix Table 60. Total number of fish targets and estimated species composition recorded by east bank side-scan sonar in the Susitna River, 1 July through 5 September 1982[1] (continued).

Date	Fish Targets	Estimated Species Composition[2] (Number of Fish)									
		Sockeye	Cumulative	Pink	Cumulative	Chum	Cumulative	Coho	Cumulative	Chinook	Cumulative
8/16	677	130	58,063	339	475,699	156	24,283	52	27,878	0	812
8/17	555	107	58,170	278	475,977	128	24,411	43	27,921	0	812
8/18	475	91	58,261	238	476,215	110	24,521	37	27,958	0	812
8/19	479	92	58,353	240	476,455	111	24,632	37	27,995	0	812
8/20	497	96	58,449	249	476,704	115	24,747	38	28,033	0	812
8/21	451	87	58,536	226	476,930	104	24,851	35	28,068	0	812
8/22	372	72	58,608	186	477,116	86	24,937	29	23,097	0	812
8/23	491	94	58,702	246	477,362	113	25,050	38	28,135	0	812
8/24	406	78	58,780	203	477,565	94	25,144	31	28,166	0	812
8/25	317	61	58,841	159	477,724	73	25,217	24	28,190	0	812
8/26	333	64	58,905	167	477,891	77	25,294	26	28,216	0	812
8/27	343	66	58,971	172	478,063	79	25,373	26	28,242	0	812
8/28	400	77	59,048	200	478,263	92	25,465	31	28,273	0	812
8/29	309	59	59,107	155	478,418	71	25,536	24	28,297	0	812
8/30	351	68	59,175	176	478,594	81	25,617	27	28,324	0	812
8/31	315	61	59,236	158	478,752	73	25,690	24	28,348	0	812
9/01	394	76	59,312	197	478,949	91	25,781	30	28,378	0	812
9/02	382	73	59,385	191	479,140	88	25,869	29	28,407	0	812
9/03	287	55	59,440	144	479,284	66	25,935	22	28,429	0	812
9/04	219	42	59,482	110	479,394	51	25,986	17	28,446	0	812
9/05	311	60	59,542	156	479,550	72	26,058	24	28,470	0	812

[1] Round-off error estimated (worst case) +/- fish per day.

[2] Based on relative abundance in fishwheel catch.

Appendix Table 61. Length composition from pink salmon collected in the Susitna River, 1976-1982.

Age Class-Year		Male			Female			Total			Ratio Male:Female
		Average Length[1] (mm)	Standard Deviation	Sample Size	Average Length (mm)	Standard Deviation	Sample Size	Average Length (mm)	Standard Deviation	Sample Size	
2_1	1982	432	3.38[2]	145	413	3.45[2]	163	422	3.42[2]	308	0.9:1
	1981	444	32	72	433	23	172	436	--	244	0.4:1
	1980	445	32	160	434	27	161	439	--	321	1.0:1
	1979	442	32	208	435	24	283	438	--	491	0.7:1
	1978	--	--	--	--	--	--	451	--	1,242	--
	1977	--	--	422	--	--	535	449	24	957	0.8:1
	1976	--	--	--	--	--	--	460	--	630	--

[1] Lengths measured from mid-eye to fork-of-tail.

[2] Standard error.

Appendix Table 62. Weight composition from pink salmon collected in the Susitna River, 1976-1982.

Age Class-Year		Male			Female			Total		
		Average Weight (kg)	Standard Deviation	Sample Size	Average Weight (kg)	Standard Deviation	Sample Size	Average Weight (kg)	Standard Deviation	Sample Size
2_1	1982	1.2	0.03[1]	145	1.0	0.02[1]	163	1.1	0.03[1]	308
	1981	1.4	0.4	72	1.2	0.3	172	1.3	--	244
	1980	1.3	0.4	160	1.2	0.2	161	1.2	--	321
	1979	1.4	0.4	208	1.2	0.2	283	1.3	--	491
	1978	--	--	--	--	--	--	1.4	--	1,242
	1977	--	--	422	--	--	535	1.4	0.3	957
	1976	--	--	--	--	--	--	1.5	--	630

[1] Standard error.

Appendix Table 63. Total number of fish targets and estimated species composition recorded by side-scan sonar in the Susitna River, 1 July through 5 September 1982[1].

Date	Fish Targets	Estimated Species Composition (Number of Fish)									
		Sockeye	Cumulative	Pink	Cumulative	Chum	Cumulative	Coho	Cumulative	Chinook	Cumulative
7/01	216	90	90	72	72	25	25	16	16	12	12
7/02	221	102	192	69	141	24	49	16	32	12	24
7/03	314	125	317	109	250	38	87	23	55	19	43
7/04	234	98	415	79	332	27	114	17	72	13	56
7/05	375	158	573	126	455	43	157	28	100	22	78
7/06	271	109	682	94	549	32	189	20	120	16	94
7/07	368	163	845	118	667	40	229	27	147	20	114
7/08	376	169	1,014	119	786	41	270	28	175	20	134
7/09	386	172	1,186	123	909	42	312	29	204	21	155
7/10	359	168	1,354	109	968	36	348	27	231	19	174
7/11	259	103	1,457	91	1,109	31	379	19	250	16	190
7/12	243	101	1,558	82	1,191	28	407	18	268	14	204
7/13	248	94	1,652	90	1,281	31	438	18	286	16	220
7/14	228	105	1,757	70	1,351	24	462	17	303	12	232
7/15	244	97	1,854	85	1,436	29	491	18	321	15	247
7/16	391	183	2,037	118	1,554	40	531	29	350	20	267
7/17	2,032	965	3,002	611	2,165	204	735	151	501	103	370
7/18	4,299	2,772	5,774	837	3,002	250	985	322	823	117	487
7/19	19,280	13,836	19,610	2,465	5,467	1,779	2,764	840	1,663	359	846
7/20	17,048	13,153	32,763	1,657	7,124	308	3,072	1,929	3,592	0	846
7/21	18,611	14,061	46,824	3,108	10,232	524	3,596	918	4,510	0	846
7/22	18,361	15,677	62,456	1,733	11,965	428	4,024	568	5,078	0	846
7/23	27,048	8,405	70,861	17,636	29,651	288	4,312	670	5,748	0	846
7/24	22,824	3,031	73,892	17,596	47,247	1,038	5,350	1,159	6,707	0	846
7/25[3]	28,319	6,009	79,901	19,202	66,449	1,796	7,146	1,312	8,219	0	846
7/26[3]	34,791	7,382	87,283	23,590	90,039	2,206	9,352	1,612	9,831	0	846
7/27[3]	53,138	9,279	96,562	40,007	130,046	1,576	10,928	2,276	12,107	0	846
7/28[3]	83,829	14,639	111,201	63,113	193,159	2,486	13,414	3,591	15,698	0	846
7/29[3]	74,579	688	111,889	72,361	265,520	535	13,949	918	16,616	76	922
7/30[3]	60,665	2,649	114,538	50,522	316,042	1,744	15,693	5,750	22,366	0	922
7/31[3]	58,067	3,610	118,148	45,130	361,172	4,212	19,905	5,115	27,481	0	922
8/01[3]	42,734	1,503	119,651	38,010	399,182	1,288	21,193	1,933	29,414	0	922
8/02[3]	30,003	52	119,703	37,298	436,480	1,137	22,330	517	29,931	0	922
8/03[3]	24,874	112	119,815	23,382	459,862	970	23,300	410	30,341	0	922
8/04[3]	10,475	0	119,815	9,992	469,854	242	23,542	242	30,583	0	922
8/05	5,304	327	120,142	4,211	474,065	542	24,084	226	30,809	0	922
8/06	4,320	249	120,391	3,386	477,451	446	24,530	238	31,047	0	922
8/07	3,925	221	120,612	3,104	480,555	398	24,928	204	31,251	0	922
8/08	2,894	174	120,786	2,371	482,926	264	25,192	83	31,334	2	924
8/09	1,462	136	120,922	1,108	484,034	126	25,318	92	31,426	1	925
8/10	1,542	167	121,089	1,111	485,145	135	25,453	129	31,555	0	925
8/11	1,223	136	121,225	876	486,021	107	25,560	105	31,660	0	925
8/12	1,438	174	121,399	999	487,020	124	25,684	140	31,800	0	925
8/13	1,372	284	121,683	659	487,679	275	25,959	154	31,954	0	925
8/14	1,124	234	212,917	538	488,217	223	26,182	129	32,083	0	925
8/15	923	186	122,103	450	488,667	194	26,376	93	32,176	0	925

-Continued-

Appendix Table 63. Total number of fish targets and estimated species composition recorded by side-scan sonar in the Susitna River, 1 July through 5 September 1982[1] (continued).

Date	Fish Targets	Estimated Species Composition (Number of Fish)									
		Sockeye	Cumulative	Pink	Cumulative	Chum	Cumulative	Coho	Cumulative	Chinook	Cumulative
8/16	752	150	122,253	369	489,036	162	26,538	72	32,248	0	925
8/17	616	123	122,376	302	489,338	133	26,671	59	32,307	0	925
8/18	561	114	122,490	272	489,610	116	26,787	59	32,366	0	925
8/19	569	116	122,606	276	489,836	118	26,905	60	32,426	0	925
8/20	591	121	122,727	286	490,172	122	27,027	62	32,488	0	925
8/21	523	106	122,833	255	490,422	109	27,136	54	32,542	0	925
8/22	477	100	122,933	228	490,655	94	27,230	56	32,598	0	925
8/23	530	118	123,051	281	490,936	120	27,350	61	32,659	0	925
8/24	487	100	123,151	235	491,171	100	27,450	52	32,711	0	925
8/25	397	61	123,212	159	491,330	143	27,593	34	32,745	0	925
8/26	399	64	123,276	167	491,497	135	27,728	34	32,779	0	925
8/27	473	66	123,342	172	491,669	193	27,921	42	32,821	0	925
8/28	497	77	123,419	200	491,869	177	28,098	43	32,864	0	925
8/29	394	59	123,478	155	492,024	145	28,243	35	32,899	0	925
8/30	432	68	123,546	176	492,200	152	28,395	37	32,936	0	925
8/31	398	61	123,607	158	492,358	146	28,541	34	32,970	0	925
9/01	452	76	123,683	197	492,555	142	28,683	37	33,007	0	925
9/02	463	73	123,756	191	492,746	159	28,842	39	33,046	0	925
9/03	352	55	123,811	144	492,890	123	28,965	30	33,076	0	925
9/04	299	42	123,853	110	493,000	141	29,106	27	33,103	0	925
9/05	388	60	123,913	156	493,156	139	29,245	34	33,137	0	925

[1] Round-off error estimated (worst case) +/- 1 fish per day.

[2] Based on relative abundance in fishwheel catch.

[3] West bank sonar counter inoperative.

Appendix Table 64. Length composition from the major age classes of chum salmon collected in the Susitna River, 1975-1982.

Age Class-Year		Male			Female			Total			Ratio Male:Female
		Average Length[1] (mm)	Standard Deviation	Sample Size	Average Length (mm)	Standard Deviation	Sample Size	Average Length (mm)	Standard Deviation	Sample Size	
4_1	1982	604	3.14[2]	116	593	2.11[2]	167	597	2.53[2]	283	0.7:1
	1981	579	87	52	579	35	88	579	--	140	0.6:1
	1980	577	41	11	574	31	24	575	--	35	0.5:1
	1979	578	43	104	578	33	252	578	--	359	0.4:1
	1978	--	--	215	--	--	281	596	30	496	0.8:1
	1977	--	--	446	--	--	356	632	26	802	1.3:1
	1976	--	--	87	--	--	95	608	27	182	0.9:1
	1975	--	--	242	--	--	299	584	--	541	0.8:1
5_1	1982	629	8.25[2]	14	612	4.49[2]	25	618	5.84	39	0.6:1
	1980	581	18	5	618	29	4	597	--	9	1.3:1
	1978	--	--	143	--	--	132	627	24	275	1.1:1
	1976	--	--	16	--	--	23	636	27	39	0.7:1
3_1	1980	546	21	5	528	27	22	531	--	27	0.2:1
	1978	--	--	72	--	--	109	533	29	181	0.7:1
	1976	--	--	19	--	--	27	552	30	46	0.7:1

[1] Lengths measured from mid-eye to fork-of-tail.

[2] Standard error.

Appendix Table 65. Weight composition from the major age classes of chum salmon collected in the Susitna River, 1980-1982.

Age Class-Year		Male			Female			Total		
		Average Weight (kg)	Standard Deviation	Sample Size	Average Weight (kg)	Standard Deviation	Sample Size	Average Weight (kg)	Standard Deviation	Sample Size
4_1	1982	3.9	0.07 [1]	99	3.6	0.04 [1]	160	3.7	0.05 [1]	259
	1981	3.6	0.6	52	3.3	0.7	88	3.4	--	140
	1980	3.1	0.7	11	3.0	0.7	24	3.0	--	35
5_1	1982	4.6	0.21 [1]	13	3.7	0.12 [1]	25	4.0	0.15 [1]	38
	1980	3.8	0.8	5	3.8	0.7	4	3.8	--	9
3_1	1980	2.5	0.4	5	2.2	0.4	22	2.3	--	27

[1] Standard error.

Appendix Table 66. Length composition from the major age classes of coho salmon collected in the Susitna River, 1975-1982.

Age Class-	Year	Male			Female			Total			Ratio
		Average Length[1] (mm)	Standard Deviation	Sample Size	Average Length (mm)	Standard Deviation	Sample Size	Average Length (mm)	Standard Deviation	Sample Size	Male:Female
3_2	1982	553	10.23[2]	25	519	7.48[2]	42	531	8.5[2]	67	0.6:1
	1981	450	40	10	489	50	19	476	--	29	0.5:1
	1980	452	52	23	476	46	36	467	--	59	0.6:1
	1979	449	80	38	494	53	23	458	--	62	1.7:1
	1978	--	--	117	--	--	100	488	49	217	1.2:1
	1977	--	--	64	--	--	31	472	55	95	2.1:1
	1975	--	--	57	--	--	42	497	--	99	1.4:1
4_3	1982	556	5.34[2]	87	542	4.47[2]	137	547	4.81[2]	227	0.6:1
	1981	524	76	81	529	50	99	527	--	180	0.8:1
	1980	515	59	72	515	41	173	515	--	245	0.4:1
	1979	502	75	96	528	76	121	516	--	217	0.8:1
	1978	--	--	321	--	--	240	523	44	561	1.3:1
	1977	--	--	613	--	--	406	519	55	519	1.5:1
	1976	--	--	171	--	--	220	534	43	391	0.8:1
	1975	--	--	156	--	--	151	545	--	307	1.0:1

[1] Lengths measured from mid-eye to fork-of-tail.

[2] Standard error.

Appendix Table 67. Weight composition from the major age classes of coho salmon collected in the Susitna River, 1979-1982.

Age Class-	Year	Male			Female			Total		
		Average Weight (kg)	Standard Deviation	Sample Size	Average Weight (kg)	Standard Deviation	Sample Size	Average Weight (kg)	Standard Deviation	Sample Size
3_2	1982	2.9	0.17 [1]	25	2.3	0.11 [1]	42	2.5	0.13 [1]	67
	1981	1.5	0.5	10	2.0	0.8	19	1.8	--	29
	1980	1.5	0.5	23	1.8	0.6	36	1.7	--	59
	1979	1.5	0.7	38	1.8	0.5	23	1.6	--	62
4_3	1982	3.0	0.09 [1]	87	2.7	0.07 [1]	137	2.8	0.08 [1]	224
	1981	2.7	1.0	81	2.7	0.8	99	2.7	--	180
	1980	2.3	0.8	72	2.2	0.6	173	2.2	--	245
	1979	2.4	0.8	96	2.5	0.1	121	2.5	--	217

[1] Standard error.

Because the Alaska Department of Fish and Game receives federal funding, all of its public programs and activities are operated free from discrimination on the basis of race, color, national origin, age, or handicap. Any person who believes he or she has been discriminated against should write to:

O.E.O.
U.S. Department of the Interior
Washington, D.C. 20240